iFit series

Rossi

Helical Inline, Bevel Helical and Parallel Shaft Helical gearmotors

rossi.com

Contents

1	**Rossi for You**	**6**
1.1	Global presence, local service	8
2	**Product Overview**	**10**
2.1	Features & Benefits	12
2.2	Electric motors	14
2.3	Inverter	15
2.4	Product Range	16
3	**Symbols and units of measure**	**18**
3.1	Symbols and units of measure	20
3.2	Icons	22
4	**Product specifications**	**24**
4.1	General specifications	26
4.2	Operational conditions	30
4.3	Surface protection	33
4.4	Storage and warehousing	34
5	**Designation**	**36**
5.1	Coding	38
5.2	Nameplate data	48
6	**Project Planning**	**50**
6.1	Selection	52
6.2	Service factor *fs*	55
6.3	Efficiency	56
6.4	Thermal power *Pt*	57
6.5	Radial loads on low speed shaft end	60
6.6	Directions of rotation of iO low speed shaft	63
7	**Mounting positions**	**64**
7.1	Mounting positions	66
7.2	Plug position	69

8	**Structural and operational details**	**78**
8.1	Lubrication	80
8.2	Adapters for motors	83
8.3	Assembling the motor (IEC or NEMA) on adapter	85
8.4	Details of gearmotor fastening flanges	86
8.5	Details of output fastening flanges	88
8.6	Dimensional tolerances	89
8.7	Overall dimensional remarks	90
8.8	Protection caps	92
8.9	Fastening bolts	93
9	**Helical inline selection tables - iC**	**94**
9.1	Possible geometrical combinations	96
9.2	Geometrical coupling tables	97
9.3	Selection tables [hp]	106
10	**Helical inline dimensional drawings - iC**	**142**
10.1	iC 272 / iC 273	144
10.2	iC 372 / iC 373	146
10.3	iC 472 / iC 473	148
10.4	iC 572 / iC 573	150
10.5	iC 672 / iC 673	152
10.6	iC 772 / iC 773	154
10.7	iC 872 / iC 873	156
10.8	iC 972 / iC 973	158
11	**Bevel helical selection tables - iO**	**160**
11.1	Possible geometrical combinations	162
11.2	Geometrical coupling tables	163
11.3	Selection tables [hp]	170

12 Bevel helical dimensional drawings - iO 194

12.1 iO 373 196
12.2 iO 473 199
12.3 iO 573 202
12.4 iO 673 205
12.5 iO 773 208
12.6 iO 873 211
12.7 iO 973 214

13 Parallel shaft helical selection tables - iP 218

13.1 Possible geometrical combinations 220
13.2 Geometrical coupling tables 221
13.3 Selection tables [kW] 229

14 Parallel shaft helical dimensional drawings - iP 256

14.1 iP 272 / iP 273 258
14.2 iP 372 / iP 373 260
14.3 iP 472 / iP 473 262
14.4 iP 572 / iP 573 264
14.5 iP 672 / iP 673 266
14.6 iP 772 / iP 773 268
14.7 iP 872 / iP 873 270
14.8 iP 972 / iP 973 272

15 Compact three-phase motor HB and brake motor HBZ 274

15.1 Compact asynchronous three-phase motor HB 276
15.2 Technical data of compact asynchronous three-phase motor HB 278
15.3 Compact asynchronous three-phase brake motor HBZ 281
15.4 Technical data of compact asynchronous three-phase brake motor HBZ 285

16 Installation and maintenance 288

16.1 Safety 290
16.2 Installation and maintenance 291

17 Gear selection data sheet 292

18 Technical formulae 293

1 Key figures

over **1,000** **people** around the world

5,000 **customers** worldwide

over **70** years of **experience**

50 million euros investments in new technologies and methodologies to improve manufacturing efficiency

17 **affiliated** companies

5 **production** facilities

8 **assembly** plants

18 **authorized** service centers

After-sale service

Highly trained mechanics and support teams can ensure a fast and efficient after-sale service providing support worldwide.

Rossi 360+

Our new space is your gateway to a world of information, assistance, and seamless access to the solutions you need.
Whether you're an end user, distributor, or OEM partner you will find a personalized area to explore and manage all things related to your Rossi products.

Visit us at rossi.com

Quality

3 years warranty*

Our drive is to innovate and boost operations by manufacturing performing, precise, reliable and high-quality products all over the world. We are always one step forward in offering and developing solutions that can satisfy an unlimited number of application needs, even in the most demanding conditions.

* As per our warranty terms.

System certifications

ISO 9001:2015

ISO 14001:2015

ISO 45001:2023

Product certifications

UL

c UL us

Ex

EAC

CE

RoHS

Product compliance

CTI

1.1

Global presence local service

Local support
Sales, customer service, technical support, spare parts

17 affiliated companies*

Worldwide distribution network*

A global network of subsidiaries and dealers. From design and execution to after-sales service. Rossi is always close to you: a local, reliable and flexible partner.

Alongside our 24/7 **Rossi for You** portal you have a suite of digital support tools enabling real time access to your order tracking, invoices, spare part tables download and contact to our service.

*All contacts available on **www.rossi.com**

2635-26.04-0-US

Main offices | Affiliated companies | Production facilities/Assembly plants

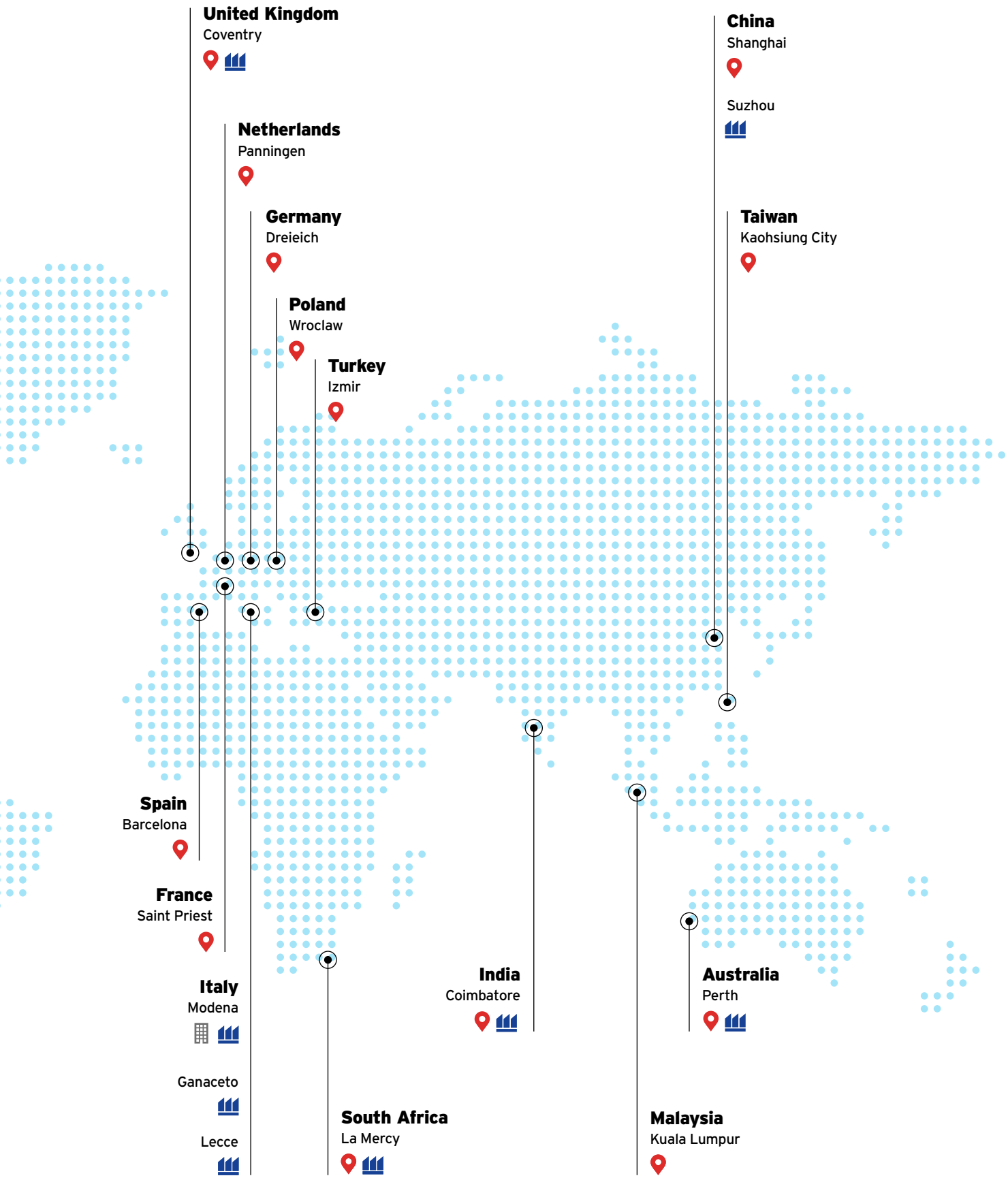

2

Product Overview

Section contents

2.1	Features & Benefits	12
2.2	Electric motors	14
2.3	Inverter	15
2.4	Product Range	16

2.1

Features & Benefits

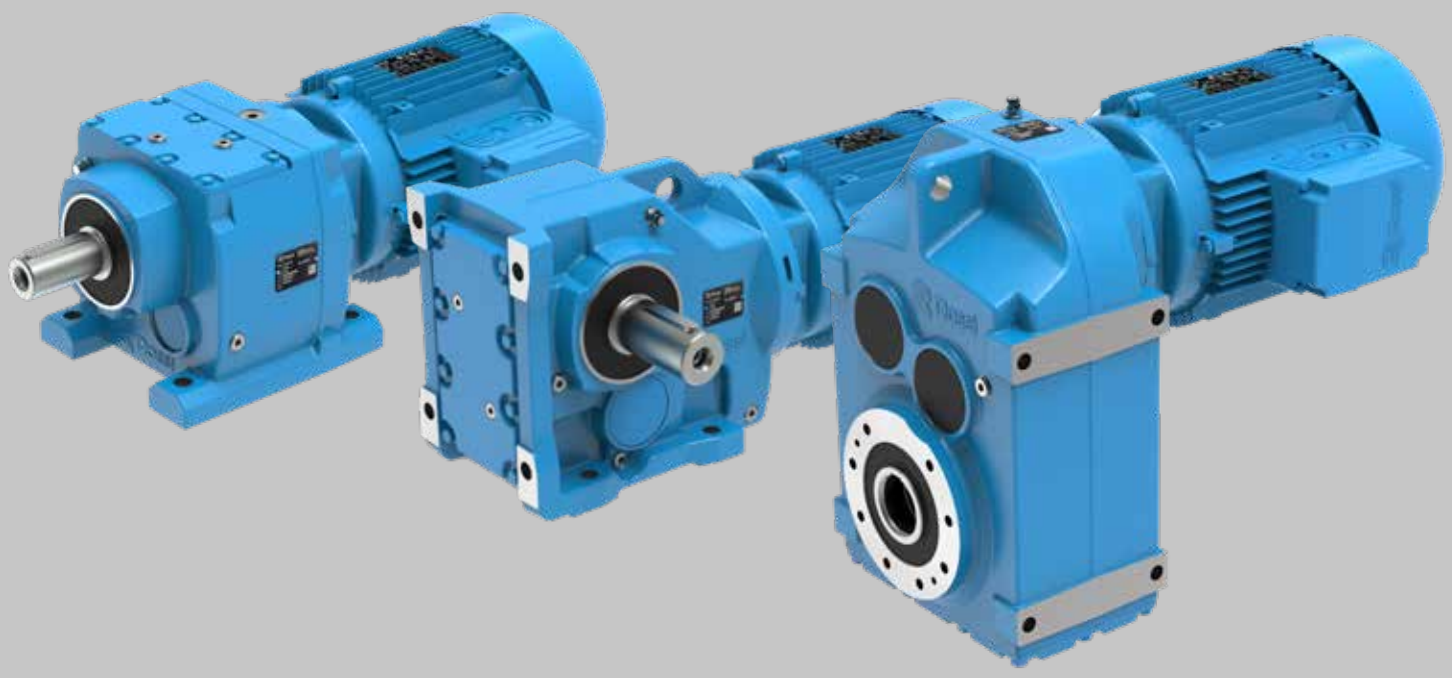

Fully interchangeable

Plug&Play.
No re-engineering costs.

100% made in EU

Superior quality,
minimum maintenance

Cast iron housing

Maximum performance and
reliability

Gear precision DIN/ISO 6

Energy saving and low noise level

IE3 electric motors

Premium efficiency

High quality

Long life lubrication. Dedicated
motor side sealing system

Compact design

Wash down capability thanks to round
shaped, smooth housing surface

High performance

Up to 12% higher
than market standard

Additional benefits

- High Customer Value
- Short Lead Times for standard products
- 3 Years Guarantee

2.2

Electric motors

- Standard and brake motors
- EISA Premium Efficiency (IE3) ≥ 1 hp
- IE2 class of the international efficiency standard (IEC 60034-30) ≤ 0.75 hp
- Supply voltage 230.460 V - 60 Hz; 9 terminals
- Aluminium frame
- Cable entry possible from two sides (at 180°)
- Motor insulation class F, rise temperature B

COMPLIANCE

- Test documents
- cULus motors certified to UL
- Machinery Directive 2006/42/EC
- Directive 2011/65/EC RoHS
- Directive «ErP» 2009/125/EC

PROTECTION/PAINTING

- Blue RAL 5010 paint with corrosivity class C3 as standard (hard and smooth clinging painting)
- IP 55

OPTIONS

- Motor insulation class H
- Bi-metal type and thermistor type (PTC) thermal probes
- Motor with connectors
- Anti-condensation heater
- Forced fan cooling (IC 416)
- Drip-proof cover
- Double shaft extension
- Incremental encoder sin/cos
- Optional painting
- Optional protection grades IP 55 ... IP 66

Inverter

- Max overloads: up to 200%
- Best sensor-less ability to handle overloads
- Flexibility in wall-mounted installation
- Full "Plug & Play"
- Autotuning, software programming and updating included
- In compliance with IE2 class ECODESIGN EN 50598 IEC/EN 60034-30-1 and Ecodesign Directive in accordance with IEC 61800-9-2
- Remote commissioning, monitoring and diagnostics, Bluetooth, App and Safety (STO)
- Communication and connection among several inverters
- A wide range of Field buses
- Comprehensive options range, components and design concept guarantee the best reliability and vibration resistance. Dust-tight and protected against water jets (IP 65).

Product

2.4

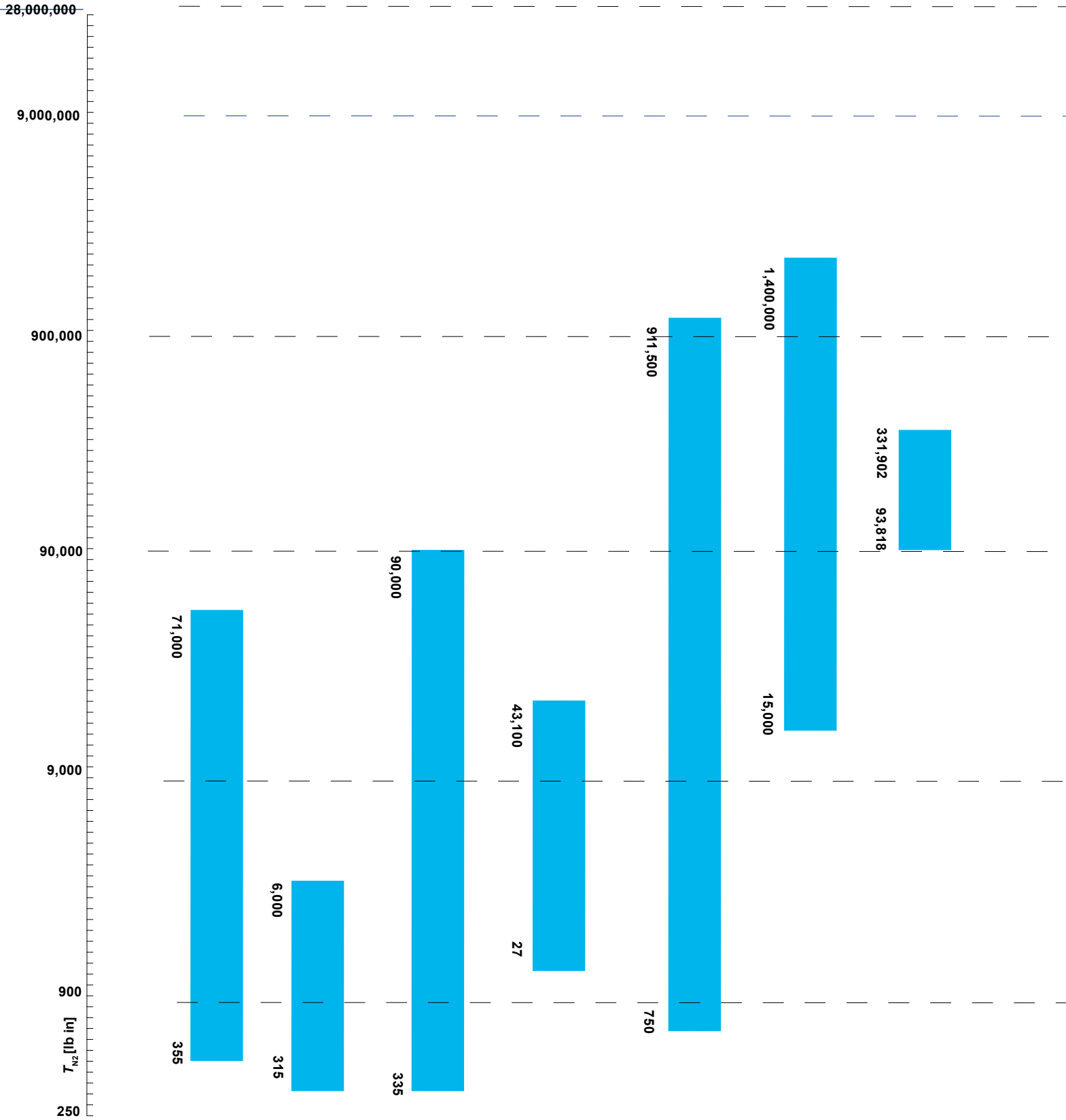

A Series
Worm

AS series
Worm Standardfit

E Series
Helical inline

iFIT Series
Helical inline, Bevel helical, Parallel shaft helical

G Series
Helical and bevel helical

GX Series Extruder
Helical

G Cooling Systems Series
Helical Bevel helical

range

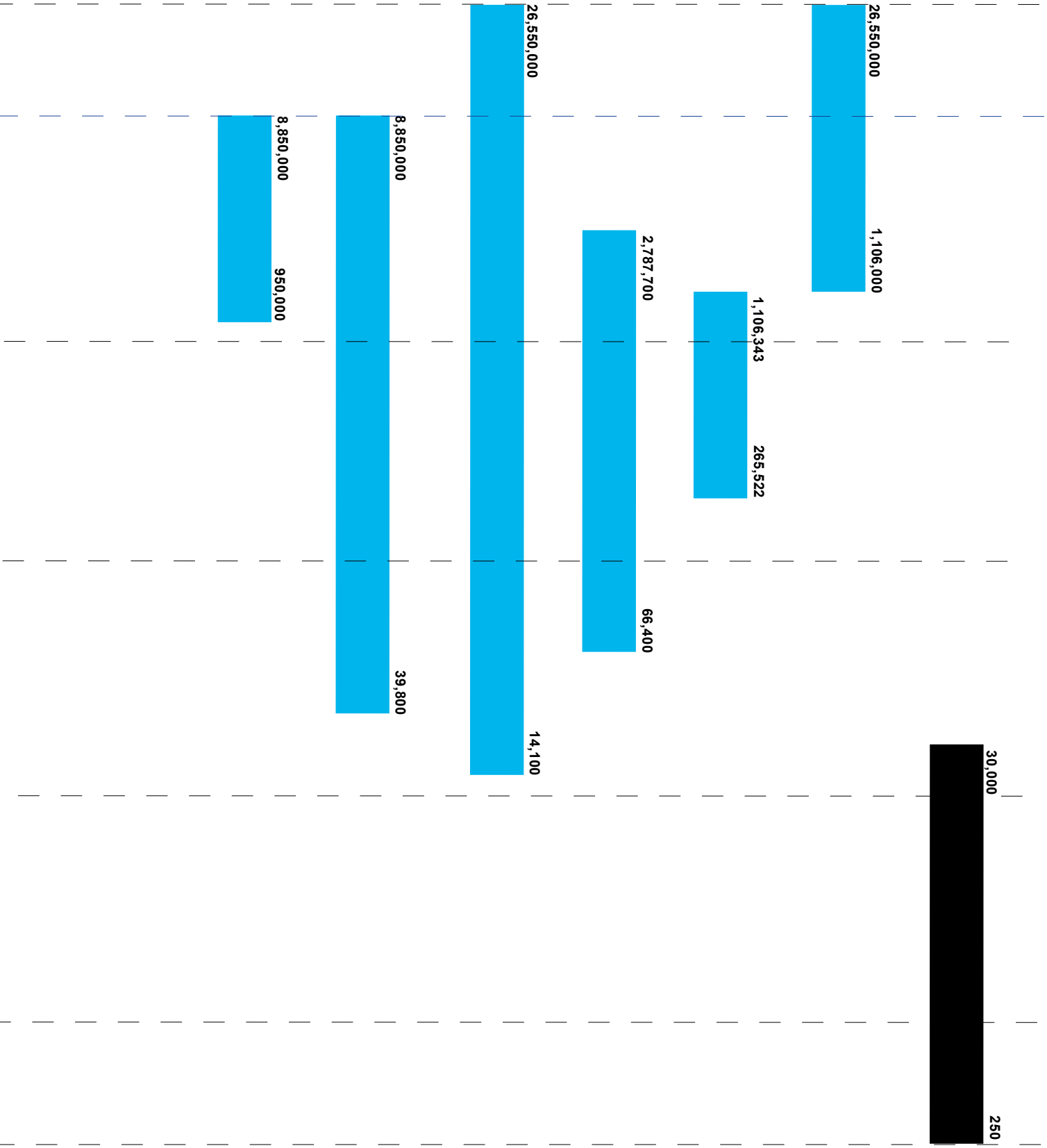

H series
Helical and bevel helical

G & H series
Drive units on base frame/ swing base

EP Series
Planetary

EPS Series
Planetary slewing

EP Winch Series
Winch drives

Combined units
Planetary + Bevel helical

SR series
Worm, helical inline, helical and bevel helical

3

Symbols and units of measure

Section contents

3.1 Symbols and units of measure 20

3.2 Icons 22

3.1

Symbols and units of measure

Symbols	Description	Unit of Measure SI
SF	service factor	
f_T	thermal factor	
H	altitude	[ft]
$IP..$	protection degree	
WK^2	moment of inertia of mass	[lb ft^2]
T	torque	[lb in]
n	rotational speed	[rpm]
p	weight	[lb]
P	power	[hp]
$S1...S10$	duty cycle	
T	temperature	[°F]
t	time	[s]
v	linear speed	[ft/s]
z	number of starts per hour	[start/h]
Gear reducer		
η	efficiency	
η_s	static efficiency	
F_{r1}	radial loads on high speed shaft	[lb]
F_{r2}	radial loads on low speed shaft	[lb]
F_{a1}	axial loads on high speed shaft	[lb]
F_{a2}	axial loads on low speed shaft	[lb]
i	transmission ratio	
L_h	bearing life	[h]
T_{N1}	nominal torque on high speed shaft	[lb in]
T_{N2}	nominal torque on low speed shaft	[lb in]
T_1	torque on high speed shaft	[lb in]
T_2	torque on low speed shaft	[lb in]
T_{2max}	maximum torque on low speed shaft	[lb in]
T_s	tightening torque for fastening bolts	[lb in]
n_1	rotation speed of high speed shaft	[rpm]
n_2	rotation speed of low speed shaft	[rpm]
P_{N1}	nominal power on high speed shaft	[hp]
P_{N2}	nominal power on low speed shaft	[hp]
P_T	thermal power	[hp]
P_{TN}	nominal thermal power	[hp]
P_1	power on high speed shaft	[hp]
P_2	power on low speed shaft	[hp]

Symbols	Description	Unit of Measure SI
	Motor	
$cos\varphi$	power factor	
C_{max}	maximum brake disk wear	[mm]
η	motor efficiency	
f	supply frequency	[Hz]
I_N	motor nominal current	[A]
I_S	starting current of the motor	[A]
WK_0^2	moment of inertia (of mass) of the motor	[lb ft^2]
T_S	starting torque, with direct on-line start	[lb in]
T_{max}	maximum torque, with direct on-line start	[lb in]
T_N	nominal torque of the motor	[lb in]
T_{bmax}	maximum braking torque	[lb in]
T_b	calibration braking torque	[lb in]
n_N	number of motor nominal rotations	[rpm]
P_N	motor nominal power	[hp]
t_a	starting time	[s]
t_b	braking time	[s]
t_1	delay of brake anchor release	[ms]
t_2	delay of braking	[ms]
t_{2cc}	braking delay with d.c. rectifier	[ms]
U	supply voltage	[V]
W_1	work of friction generating a brake disk wear of 1 mm	[MJ/mm]
W_{max}	maximum work due to friction for each braking	[10^6 lb in]

The dimensions are expressed in mm unless otherwise stated

3.2

Icons

Icons	Description
p.	refer to page
	attention
	breather plug
	level plug
	drain plug
	breather plug not in view (opposite side)
	level plug not in view (opposite side)
	drain plug not in view (opposite side)
iC	iFIT helical inline gearmotor
iO	iFIT bevel helical gearmotor
iP	iFIT parallel shaft helical gearmotor

Icons	Description
kg	weight (without oil)
l	oil quantity
2	**iC** - 2 reduction stages
3	**iC** - 3 reduction stages
3	**iO** - 3 reduction stages
2	**iP** - 2 reduction stages
3	**iP** - 3 reduction stages
	refer to motor section
	refer to section motor adapters
	refer to section geometrical pairings
FB14	refer to section output flange B14 iO
FB14	refer to section output flange B14 iP

page intentionally left blank

4

Product specifications

Section contents

4.1	General specifications	26
4.1.1	Gear reducer	29
4.1.2	Electric three-phase motor	29
4.2	Operational conditions	30
4.2.1	Operational ambient temperature	30
4.2.2	Installation altitude	30
4.2.3	Duty cycles	31
4.2.4	Speed	32
4.2.5	Sound levels	32
4.2.6	Accessibility and heat dissipation	32
4.2.7	Weights	32
4.2.8	Low speed shaft seals	32
4.3	Surface protection	33
4.4	Storage and warehousing	34

4.1

General specifications

Helical inline gearmotors - iC

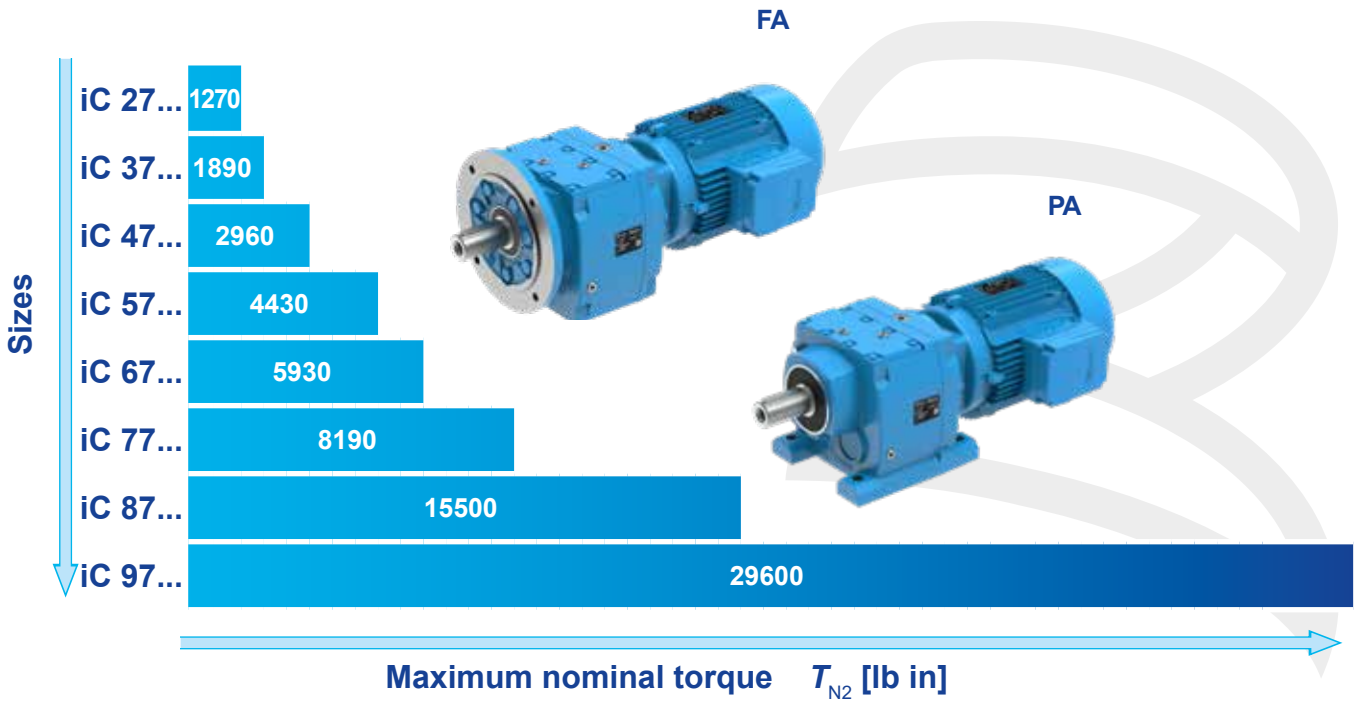

		iC 27...	iC 37...	iC 47...	iC 57...	iC 67...	iC 77...	iC 87...	iC 97...
Low speed solid shaft diameter	[in]	1	1	1.25	1.375	1.375	1.625	2.125	2.375
Shaft height (design PA)	[mm]	90	90	115	115	130	140	180	225
B5 flange diameter (design FA)	[mm]	120...160	120...200	140...200	160...250	200, 250	250, 300	300, 350	350, 450
Maximum nominal torque	[lb in]	1270	1890	2960	4430	5930	8190	15500	29600
Maximum nominal radial load	[lb]	950	1110	1220	1600	1700	2230	3800	4450

- **Maximum interchangeability** (shaft height, low speed shaft end, foot dimensions and fitting holes, designs), and performance equal or higher than market standards;
- **NEMA Premium efficiency motors (≥ 1hp)**;
- **foot mounting** (foot mounted gear reducer housing), **flange mounting** (up to 4 flanges for each gear reducer size),
- **gear reducer cast iron single piece housing**, high stiffness and dimensional accuracy;
- generously proportioned bearings of **low speed shaft** (bearings and shaft) in order to withstand high loads on shaft end;
- **high manufacturing quality standard**
- **high, reliable and tested performances**
- **compact motors**, under accuracy rating, also in brake version, suitable for applications with inverter.

Bevel helical gearmotors - iO

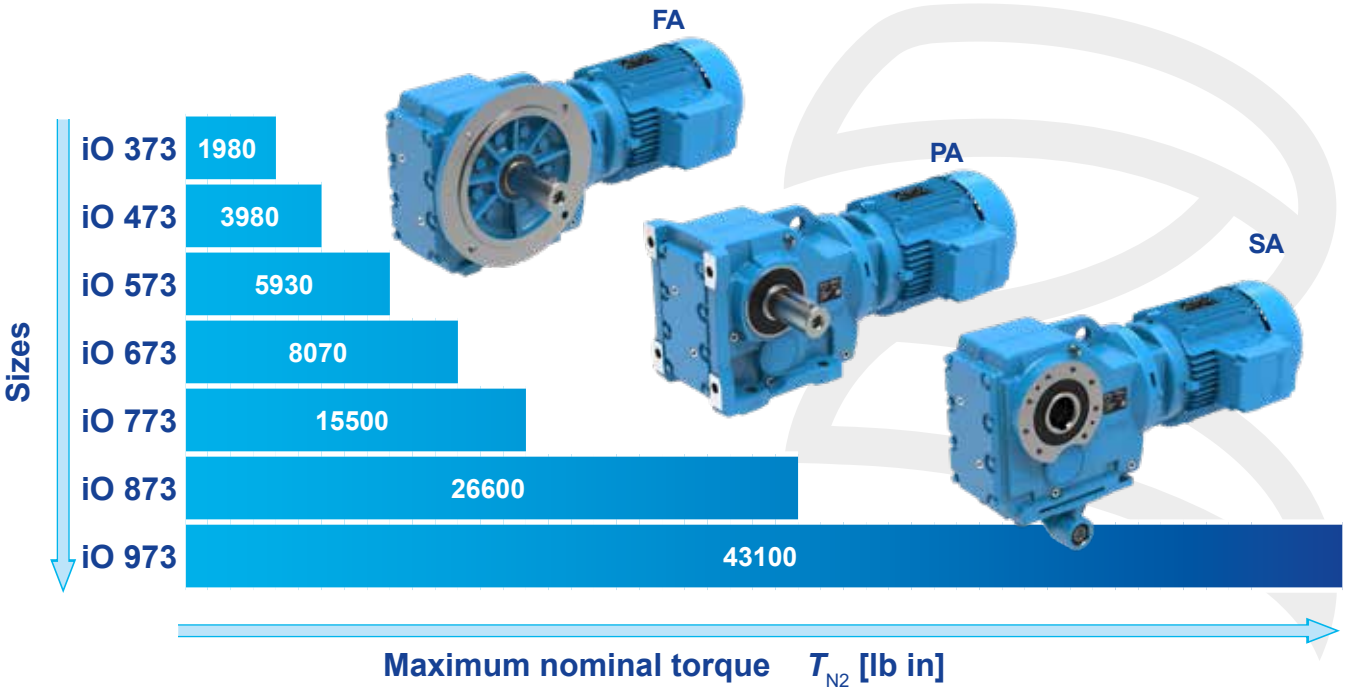

		iO 37	iO 47	iO 57	iO 67	iO 77	iO 87	iO 97
Low speed solid shaft diameter	[in]	1	1.250	1.375	1.625	2	2.375	2.875
Low speed hollow shaft diameter	[in]	1.250	1.375	1.5	1.5	2	2.375	2.750
Shaft height (design PA, SA)	[mm]	100	112	132	140	180	212	265
B5 flange diameter (design FA)	[mm]	160	200	250	250	300	350	450
Maximum nominal torque	[lb in]	1980	3980	5930	8070	15500	26600	43100
Maximum nominal radial load	[lb]	1250	1320	1700	2800	3550	6000	9000

- **Maximum interchangeability** (shaft height, low speed shaft end, foot dimensions and fitting holes, designs), and performance equal or higher than market standards;
- **NEMA Premium efficiency motors (≥ 1hp)**;
- **foot mounting** foot mounted gear reducer housing), **flange mounting**, **shaft mounted;**
- **gear reducer cast iron single piece housing**, high stiffness and dimensional accuracy;
- generously proportioned bearings of **low speed shaft** (bearings and shaft) in order to withstand high loads on shaft end;
- **high manufacturing quality standard**
- **high, reliable and tested performances**
- **compact motors**, under accuracy rating, also in brake version, suitable for applications with inverter.

Parallel shaft helical gearmotors - iP

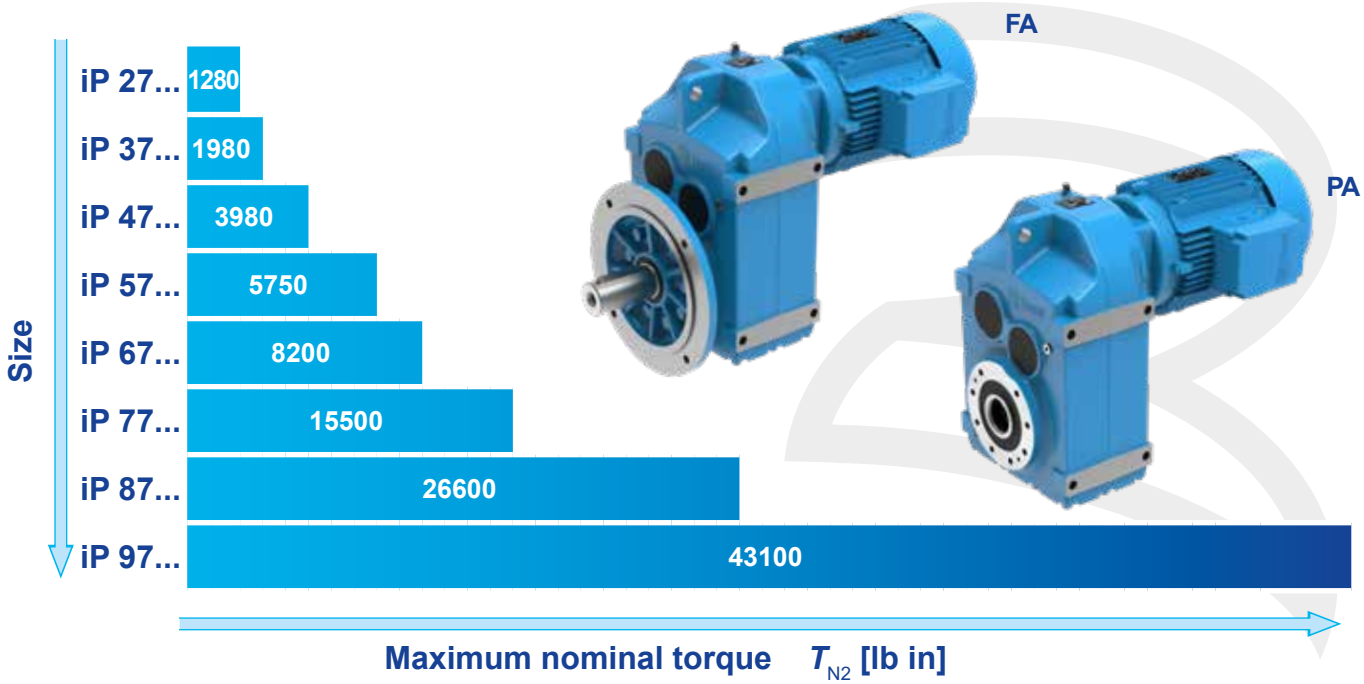

		iP 27...	iP 37...	iP 47...	iP 57...	iP 67...	iP 77...	iP 87...	iP 97...
Solid low speed shaft diameter	[in]	1	1	1.250	1.375	1.625	2	2.375	2.875
Hollow low speed shaft diameter	[in]	1	1.250	1.375	1.5	1.5	2	2.375	2.750
Shaft height (design PA)	[mm]	75	82,5	90	100	106	135	165	200
B5 flange diameter (design FA)	[mm]	160	160	200	250	250	300	350	450
Maximum nominal torque	[lb in]	1280	1980	3980	5930	8190	15000	29650	43100
Maximum nominal radial load	[lb]	1000	960	1300	2000	2300	3500	4450	6700

- **Maximum interchangeability** (shaft height, low speed shaft end, foot dimensions and fitting holes, designs), and performance equal or higher than market standards;
- **NEMA Premium efficiency motors (≥ 1hp)**;
- **foot mounting** (foot mounted gear reducer housing), **flange mounting**;
- **gear reducer cast iron single piece housing**, high stiffness and dimensional accuracy;
- generously proportioned bearings of **low speed shaft** (bearings and shaft) in order to withstand high loads on shaft end;
- **high manufacturing quality standard**
- **high, reliable and tested performances**
- **compact motors**, under accuracy rating, also in brake version, suitable for applications with inverter.

4.1.1 Gear reducer

Main structural features:

- cast iron single-piece housing 250 UNI ISO 185 with stiffening ribs and high lubricant capacity;
- low speed shaft ball or tapered roller bearings (on request for sizes ≥ iO 47 and ≥ iP 47 with hollow low speed shaft) amply sized to carry heavy loads on the low speed shaft end;
- pinion of final reduction with three bearings (sizes ≥ iC 57) in order to ensure the best meshing conditions (no overhung wheel, maximum rigidity and overload capacity, maximum reduction of noise level);
- first reduction stage pinion directly fitted with interference onto the motor shaft end;
- Gleason helical spur and spiral bevel gears with ground profile for maximum load capacity, smooth operation and quietness;
- gears load capacity calculated for tooth breakage and pitting according to standard ISO;
- oil-bath lubrication; all sizes are supplied filled with polyglycol synthetic oil (PAG), "for life" lubrication;
- metal plugs (filler plug with valve; drain plug; level plug);
- paint: external coating with two-component water-based acrylic enamel appropriate for resistance to normal industrial environments (corrosivity class C3 ISO 12944-2); color blue RAL 5010 DIN 1843; internal protection with paint providing resistance to synthetic oils.

4.1.2 Electric three-phase motor

Dimensions and masses of gearmotors described in present catalog are referred to standard motor and brake motors of catalog TX.

Main structural features:

- compact TEFC (Totally enclosed Fan Cooled)motor, 3 phase, 60HZ Standard);
- IP 55 protection, insulation class F, temperature rise class B;
- rated power delivered on continuous duty (S1) and referred to nominal voltage and frequency, ambient temperature 104 °F and maximum altitude 3281 ft ;
- suitable for running with inverter (generous electromagnetic sizing, low-loss eletrical stamping, phase separators, etc.);
- design available for every application need: flywheel, independent cooling fan, independent cooling fan and encoder, etc.;
- paint: external protection with two-component water-based acrylic enamel appropriate for resistance to normal industrial environments (corrosivity class C3 ISO 12944-2); color blue RAL 5010 DIN 1843.

Brake motor main structural features

- particularly strong construction to withstand braking stresses; maximum reduction of noise level;
- spring-loaded d.c. electromagnetic brake; feeding from the terminal box;
- brake can also be independently fed directly from the line;
- braking torque proportioned to motor torque (usually $T_b \approx 2\ T_N$);
- high frequency of starting enabled;
- rapid, precise stopping;
- hand lever for manual release with automatic return; removable lever rod.

For other specifications and details see specific documentation of catalog TX.

Specific standards for electric motors:

- nominal powers and dimensions to CENELEC HD 231 (IEC 72-1, CNR-CEI UNEL 13117-71 and 13118-71, DIN 42677, NF C 51- 120, BS 5000-10 and BS 4999-141) for mounting positions IM B5, IM B14 and derivatives;
- nominal performances and running specifications to CENELEC EN 60034-1 (IEC 34-1, CEI EN 60034-1, DIN VDE 0530-1, NF C51-111, BS EN 60034-1);
- protection to CENELEC EN 60034-5 (IEC 34-5, CEI 2-16, DIN EN 60034-5, NF C51-115, BS 4999-105);
- mounting positions to CENELEC EN 60034-7 (IEC 34-7, CEI EN 60034-7, DIN IEC 34-7, NF C51-117, BS EN 60034-7);
- sound levels to CENELEC 60034-9 (IEC 34.9, DIN 57530 pt. 9);
- balancing and vibration velocity (vibration under standard rating N) to CENELEC HD 53.14 S1 (IEC 34-14, ISO 2373 CEI 2-23, BS 4999-142); motors are balanced with half key inserted into shaft extension;
- cooling to CENELEC EN 60034-6 (CEI 2-7, IEC 34-6): standard type IC 411; type IC 416 for non-standard design with axial independent cooling fan.
- TENV (Totally Enclosed Non-Ventilated) motor, 3 phase, 60hz optional.

4.2

Operational conditions

4.2.1 Operational ambient temperature

Gear reducers

Gear reducers are suitable for operation at ambient temperature 32 °F / +104 °F (with peaks down to -4 °F / +122 °F).
The operation outside this range, with a minimum of -40 °F and a maximum of +140 °F, must be evaluated in relation to the specific operating conditions, duty cycle, type of lubricant, type of seals and cooling/heating system (where possible); please contact Rossi North America.
The catalog data are based on an operational ambient temperature of 77 °F (see pages 57 and 58).

Motors

HB series motors are suitable for operation in an ambient temperature range of -5 °F / +104 °F.
The operation outside this range is possible by adopting some precautions: contact Rossi North America.
For drives with inverters, it is necessary to take into account the higher thermal stresses to which the motor windings may be subjected.
If needed, contact Rossi North America.

4.2.2 Installation altitude

Installation altitude affects the effectiveness of convection heat dissipation; heat dissipation capacity decreases as installation altitude increases.
Catalog data are referred to a maximum altitude of 3281 ft.

4.2.3 Duty cycles

Continuous duty (S1)
Operation at a constant load maintained for sufficient time to allow the motor to reach thermal equilibrium.
Abbr. S1

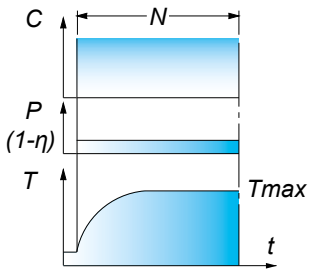

Short time duty (S2)
Running at constant load for a given period of time less than that necessary to reach normal running temperature, followed by a rest period long enough for motor's return to ambient temperature.
Abbr. S2 + time N (minimum)

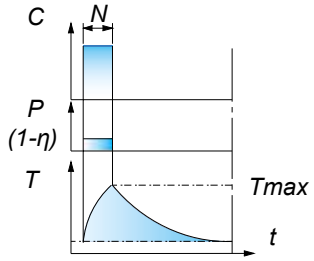

Intermittent periodic duty (S3)
Succession of identical work cycles consisting of a period of running at constant load and a rest period. Current peaks on starting are not to be of an order that will influence motor heat to any significant extent.
Abbr. S3 + cyclic duration factor

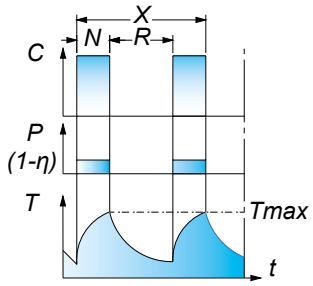

Cyclic duration factor = N/(N+R)·100 [%]

where

N = running time at constant load
R= rest time
For values of N+R > 10 min contact Rossi North America.

In case of a duty-requirement type S2 ... S10 the motor power can be increased as per the following table; starting torque keeps unchanged.

Duty cycle			Motor size		
			63 ... 90	100 ... 132	160 ... 315
S2	duration of running	**90 min**	1	1	1.06
		60 min	1	1.06	1.12
		30 min	1.25	1.18	1.25
		10 min	1.25	1.25	1.32
S3	cyclic duration factor	**60%**	1.12		
		40%	1.18		
		25%	1.25		
		15%	1.32		
S4 ... S10			Contact Rossi North America		

4.2.4 Speed

Gearmotor low speed shaft rotation speeds indicated in the catalog are determined from the nominal HB motor speed under nominal operating conditions and gear reducer transmission ratio.
Actual speed may deviate from this value depending on load, actual operating conditions and power system.

4.2.5 Sound levels

The standard levels of sound power emission L_{WA} relevant to the gearmotors of this catalog, running at nominal load and speed, fulfill the limits settled by VDI 2159 for gear reducers and EN 60034 for motors.

4.2.6 Accessibility and heat dissipation

Position the gearmotor so as to allow a free passage of air for cooling both gear reducer and motor (especially at motor fan side).
Avoid any obstruction to the air-flow; heat sources near the gear reducer that might affect the temperature of cooling-air and of gear reducer for radiation; insufficient air recycle or any other factor hindering the steady dissipation of heat.
Also provide adequate spacing or shielding of heat-sensitive components (motor, brake, motor-inverter, electronic components, etc.) from hot surfaces of the driven machine, and provide adequate accessibility space for maintenance operations.

4.2.7 Weights

The weights shown in the catalog refer to gearmotors without lubricating oil.
Actual weights may vary depending on size, gearbox, transmission ratio, motor and whether there are accessories or special designs.

4.2.8 Low speed shaft seals

For aggressive environmental conditions or particularly severe operating conditions, the option “Sealing rings (gear reducer and motor) in fluoride compound” is available.
For gear reducer size ≥ iC 37 with flange and size ≥ iO 473 and ≥ iP 473 with flange and solid shaft it is possible to have the option «Double seal on low speed shaft».

4.3 Surface protection

The gearmotors are protected externally (painting) with a water-based polyacrylic resin paint, suitable for withstanding normal indoor and outdoor industrial environments; Free from chemicals, pollution and salinity (classified C3-Low according to ISO 12944-2, color blue RAL5010).

Other paints and protection degrees are available on request as per table below.

Field of use	Features	Corrosivity class ISO 12944-2	Durability class ISO 12944-2	Description treatment	Final thickness on machined parts [µm] ISO 19840	Rossi internal code
Urban and industrial atmospheres, production rooms with high humidity and slight air pollution	Good resistance to atmospheric and aggressive agents	C4	Low	1) Dual compound high thickness epoxy primer 2) Water-based top coat with polyacrylic resins	≥ 160	**1HRAL5010 (blue)**
			Medium [2]	1) Dual compound high thickness epoxy primer 2) Water-based top coat with polyacrylic resins	≥ 180	**2HRAL5010 (blue)**
			High [3]	1) Dual compound high thickness epoxy primer 2) Water-based top coat with polyacrylic resins	≥ 240	**3HRAL5010 (blue)**
Industrial areas with high humidity, aggressive environment and coastal areas with high salinity	Excellent resistance to atmospheric and chemical agents Outdoor applications in saline environment	C5	Medium	1) Sanding 2) High-zinc epoxy primer 3) Zinc phosphate epoxy intermediate 4) Water-based top coat with polyacrylic resins	≥ 240	**2IRAL5010 (blue)** [1]
			High [2]	1) Sanding 2) High-zinc epoxy primer 3) Zinc phosphate epoxy intermediate 4) Sealing 5) Water-based top coat with polyacrylic resins	≥ 280	**2KRAL5010 (blue)** [1]
	Excellent resistance to atmospheric and chemical agents Outdoor applications in chemically aggressive environments		Medium	1) Sanding 2) High-zinc epoxy primer 3) Zinc phosphate epoxy intermediate 4) Zinc phosphate epoxy top coat	≥ 240	**2LRAL5010 (blue)** [1]
			High [2]	1) Sanding 2) High-zinc epoxy primer 3) Zinc phosphate epoxy intermediate 4) Sealing 5) Zinc phosphate epoxy top coat	≥ 280	**2YRAL5010 (blue)** [1]

[1] Available for sizes **≥ 47**.
[2] Not available on motors
[3] For motors ,C4H possible with cycle 2H sp ≥ 180 µm

NOTE: C3-High class coating cycles, specific characteristics: Bactericidal, for ATEX and FOOD environments available upon request

4.4

Storage and warehousing

Rossi gearmotors must be stored in a closed environment where they are protected from solar radiation and corrosive agents. The ambient must be sufficiently clean, dry (relative humidity < 50 %), free from excessive vibrations (v_{eff} ≤ 0,2 mm/s) to avoid damage to bearings.

Ambient temperature 32 ÷ 104 °F; with peaks up to a ± 18 °F.

For different ambient conditions, contact Rossi North America.

The gear units and gearmotors must be positioned according to the mounting position stated in the order and on the nameplate. **Do not stack units.**

Do not, under any circumstances, loosen the closed plugs or activate the drain plug before commissioning.

For storage periods of 12 to 24 months, we recommend requesting the "Long term storage" option, which provides:

- supply of the gearbox without oil filling;
- protection of the internal volume of the gearbox by applying VCI lubricant;
- application of a layer of special anti-corrosive oil on all unpainted external parts (shafts, feet, flanges), including galvanized components (screws, nuts, washers, eyebolts, etc.);
- application of adhesive label specific to the type of protection treatment;
- the packing with sealed VCI bag.

For longer periods please contact Rossi North America.

page intentionally left blank

5

Designation

Section contents

5.1	Coding	38
5.1.1	Helical inline gearmotor designation - iC	38
5.1.2	Bevel helical gearmotor designation - iO	40
5.1.3	Design and machine side - iO	41
5.1.4	Parallel shaft helicalgearmotor designation - iP	42
5.1.5	Motor designation	43
5.1.6	Motor terminal block	43
5.1.7	Gear reducer options coding	44
5.1.8	Motor options coding	44
5.1.9	Helical inline designation examples - iC	45
5.1.10	Bevel helical designation examples - iO	46
5.1.11	Parallel shaft helicalgearmotor examples - iP	47
5.2	Nameplate data	48
5.2.1	Gear reducer nameplate	48
5.2.2	Motor nameplate	48

5.1

Coding

5.1.1 Helical inline gearmotor designation - iC

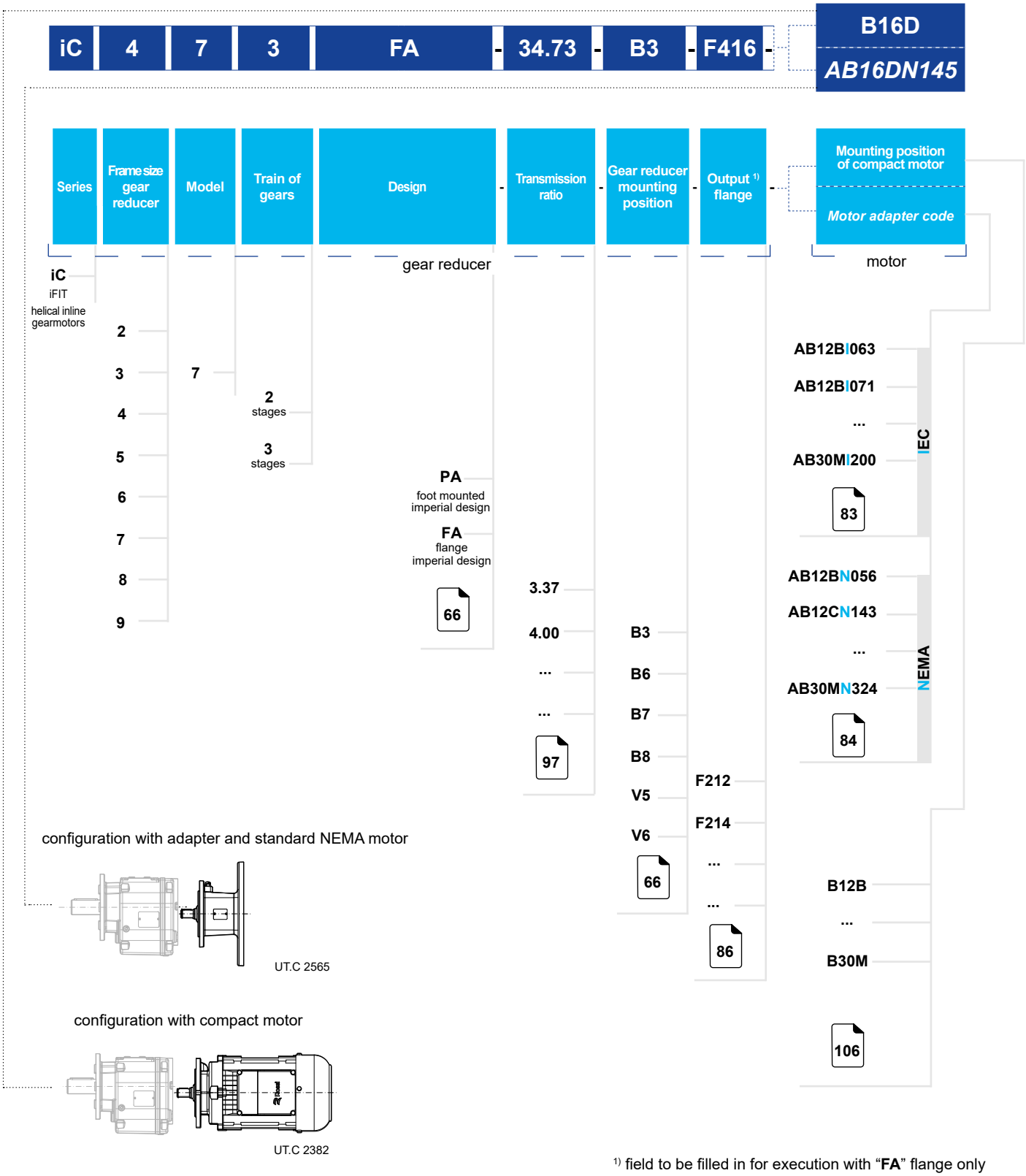

1) field to be filled in for execution with "**FA**" flange only

page intentionally left blank

5.1.2 Bevel helical gearmotor designation - iO

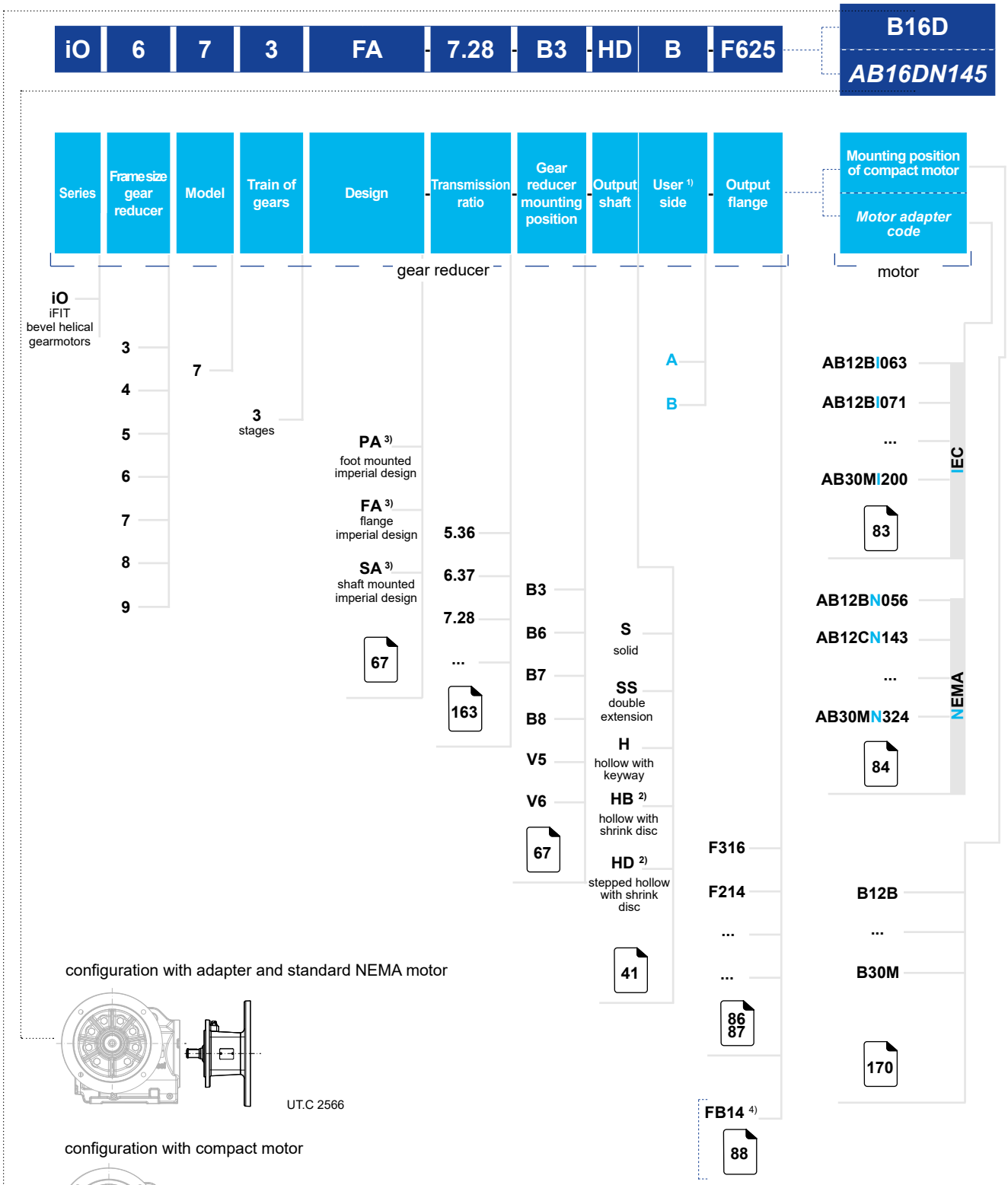

configuration with adapter and standard NEMA motor

UT.C 2566

configuration with compact motor

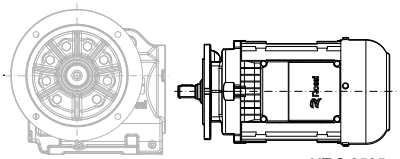

UT.C 2535

[1] field not to be filled in for **"PA"** and **"SA"** designs with **"H"** or **"SS"** shafts
[2] available only for **"PE"**, **"FE"** and **"SE"** design with metrical shaft
[3] for **"PE"**, **"FE"** and **"SE"** design, please see iFIT metric edition catalog
[4] for designs **"FE"** and **"FA"** with shafts **"H"** or **"HB "** or **"HD "**, **only**

5.1.3 Design and machine side iO

	Flange mounted design	Foot mounted design	Shaft mounted design
Solid shaft	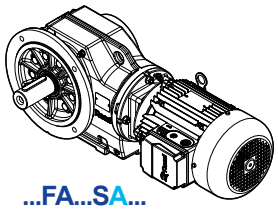 ...FA...SA... 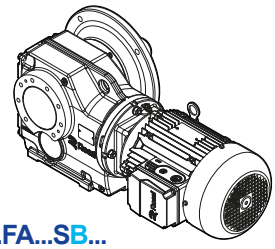 ...FA...SB...	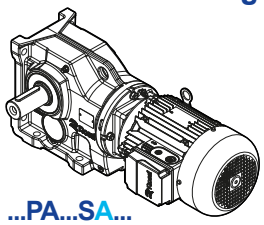 ...PA...SA... 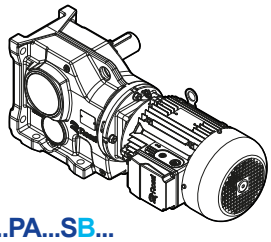 ...PA...SB...	–
Double extension shaft	–	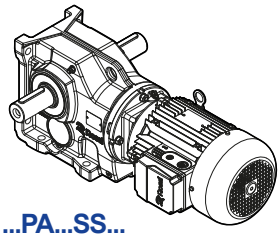 ...PA...SS...	–
Hollow shaft	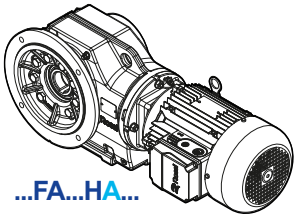 ...FA...HA... 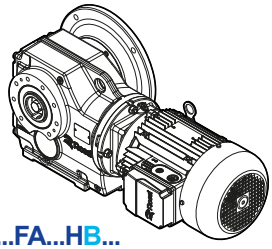 ...FA...HB...	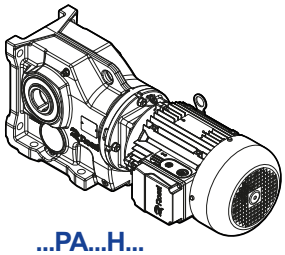 ...PA...H...	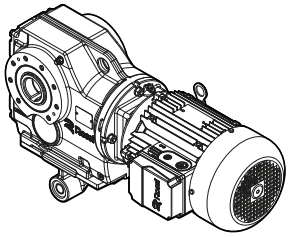 ...SA...H...
Hollow shaft with shrink disc	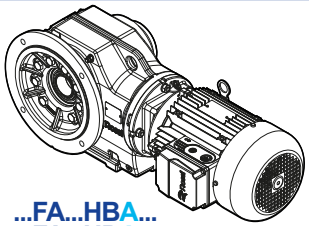 ...FA...HBA... ...FA...HDA... 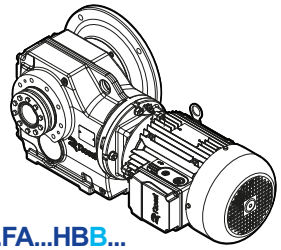 ...FA...HBB... ...FA...HDB...	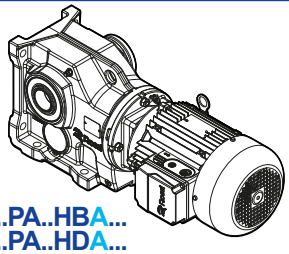 ...PA..HBA... ...PA..HDA... 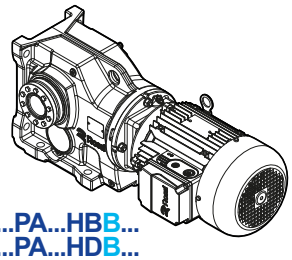 ...PA...HBB... ...PA...HDB...	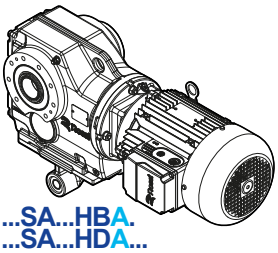 ...SA...HBA. ...SA...HDA... 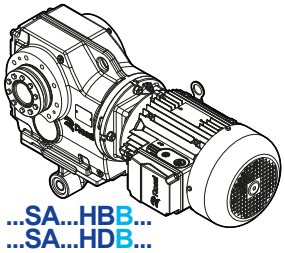 ...SA...HBB... ...SA...HDB...

UT.C 2536

5.1.4 Parallel shaft helical gearmotors - iP

iP	6	7	3	FA	- 34,01	- B3	- HDA	- F625	B16D / *AB16BI063*
Series	Frame size gear reducer	Model	Train of gears	Design	- Transmission ratio	- Gear reducer mounting position	- Output shaft	- Output flange	Mounting position of compact motor / *Motor adapter code*
					gear reducer				motor

iP – Parallel shaft helical iFIT

Frame size gear reducer: 2, 3, 4, 5, 6, 7, 8, 9

Model: 7

Train of gears: 2 stages; 3 stages

Design: PA – foot mounted imperial design; FA – flange mounted imperial design; 68

Transmission ratio: 109,90; ...; 221

Gear reducer mounting position: B3, B6, B7, B8, V5, V6; 68

Output shaft: S – solid; H – hollow with keyway; HBA [2] – hollow with shrink disc; HDA [2] – stepped hollow with shrink disc

Output flange: F316, F214, ..., ...; 86 87; FB14 [1]; 88

Motor adapter code:

IEC: AB12BI063, AB12BI071, ..., AB30MI200; 83

NEMA: AB12BN056, AB12CN143, ..., AB30MN324; 84

B12B, ..., B30M; 229

configuration with adapter and standard NEMA motor

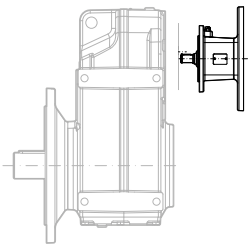

UT.C 2620

configuration with compact motor

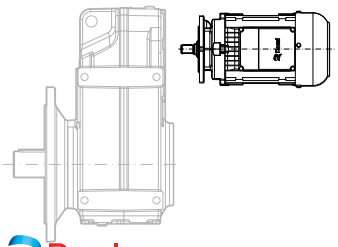

UT.C 2589

[1] for designs ≥ iP 37 **"FA"** with shafts **"H"** or **"HBA"** or **"HDA" only**
[2] not suppliable for some gear reducer/compact motor combined units, see ch. 14.

5.1.5 Motor designation

HB	3	Z	90S	-	4	230.460	60	-	B16D	-	TB2 [1]
Series	Energy class	Integrated brake	Motor size	-	N. poles	Supply voltage	Frequency	-	Motor mounting position: compact	Motor mounting position: IEC	Terminal box position
HB	2 High efficiency IE2	-	63A		4	230.460	60		B12B	B5	TB1
	3 Premium efficiency IE3	Z	63B		6	...			...		TB2
			71B						B30C		TB3
			...								
	278	281	278		278	278	278		106 170 229		

5.1.6 Motor terminal block

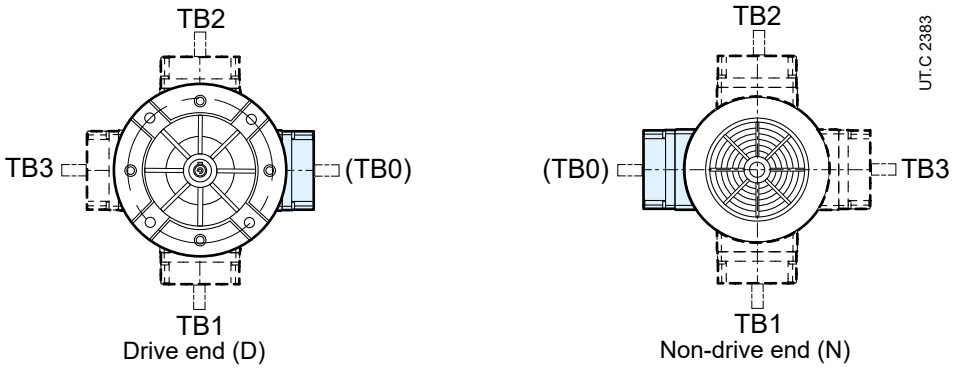

The designation is to be completed with the statement of motor terminal box position if differing from the standard one TB0 (see also pages 71, 72 for helical inline iC, pages 73, 74, 75 for bevel helical iO and 76, 77 for parallel shaft helical iP). The release lever (for brake motor) follows the position of the terminal box.

The cable entry is the responsibility of the Buyer: the terminal box is integral with housing with knockout cable openings on both sides (one for power cable and one for auxiliary equipment).

[1] For standard terminal box position TB0, no indication in motor designation is necessary.

5.1.7 Gear reducer options coding

Ref.	Description	Code	Gearmotor size		
			iC	iO	iP
(1)	Strengthened low speed shaft bearings	SP2	≥ iC 47...	≥ iO 473 H, HB, HD	≥ iP 47...H, HBA, HDA
(2)	Low speed shaft double seal (only for design with flange)	DT2	≥ iC 37...FA	≥ iO 473 FA...S	≥ iP 47...FA...S
(3)	Seal rings (gear reducer and motor) in fluoro rubber	TV2	all	all	all
(4)	Special painting cycle (gear reducer and motor)	page 33	all	all	all
(6)	Universal mounting position	BX	all	all	all
(7)	Stainless steel nameplate (gear reducer and motor)	NP316	all	all	all
(9)	Prearranged for "long-term storage"	LS	all	all	all
(10)	Terminal box position differing from TB0	TB1, TB2, TB3	all	all	all
(11)	Torque arm	TA	–	SE	–
(12)	Hollow low speed shaft washer	R	–	H	H
(13)	Rubber buffer for shaft mounting design	RBF	–	–	PA...H, HBA, HDA

5.1.8 Motor options coding

Ref.	Description	Code	HB	HBZ
(1)	Special motor supply	–	✓	✓
(3)	Motor insulation class H	,H	✓	✓
(8)	Condensate drain holes	,CD	✓	✓
(9)	Additional windings impregnation	,SP	✓	✓
(13)	Anti-condensation heater	,S	✓	✓
(16)	Second shaft end	,AA	✓	✓
(17)	Axial independent cooling fan	,V ...	✓	✓
(18)	Axial independent cooling fan and encoder	,V ... ,E...	✓	✓
(19)	Thermistor type thermal probes (PTC)	,T15 ,T17	✓	✓
(20)	Bi-metal thermal probes	,B15 ,B17	✓	✓
(21)	Drip-proof cover	,PP	✓	✓
(25)	Manual release lever position different from standard position (L)	,L1 ,L2 ,L3	–	✓
(26)	D.c. brake separate supply	…	–	✓
(35)	Light alloy fan	,VL	✓	✓
(36)	Encoder	,E1 ... ,E5	✓	✓
(42)	Motor certified to UL	,UL	✓	✓
(47)	Design for damp and corrosive environment,	,UC	–	✓
	stainless steel bolts and screws of brake disk	,DB	–	✓
(48)	IP 56 protection	,IP 56	–	✓
(49)	IP 65 protection	,IP 65	–	✓
(51)	Strengthened design for supply from inverter (sizes 160 ... 200)	,IR	✓	✓
(61)	Manual rotation	,MM	–	✓
(62)	Prearranged for encoder	,PE	✓	✓
(63)	Axial independent cooling fan and prearranged for encoder	,V... ,PE	✓	✓
(64)	IP 66 protection	,IP 66	✓	–

For a complete motor options description see cat. TX motors of series HB.

5.1.9 Helical inline designation examples - iC

Example 1: compact gearmotor

iC	4	7	3	FA	-	34.73	-	B3	-	F416	-	B16D

- helical inline gearmotor size iC 47
- 3 reduction stages
- design with flange
- imperial shaft
- transmission ratio 34.73
- gear reducer mounting position B3
- output flange F416
- compact motor with mounting position B16D

Compact motor designation compatible with above coded gear reducer follows

HB	3	Z	90S	-	4	230.460	60	-	B16D	-	TB0

- motor type HB, with premium efficiency IE3, brake type
- motor size 90S
- number of poles 4
- supply voltage 230-460 V at 60 Hz
- compact motor with mounting position B16D
- terminal box position TB0

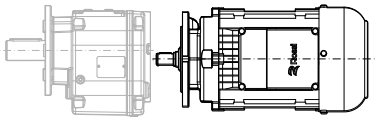

UT.C 2382

Example 2: gearmotor with NEMA adapter

iC	4	7	3	FA	-	34.73	-	B3	-	F416	-	AB16DN145

- helical inline gearmotor size iC 47
- 3 reduction stages
- design with flange
- imperial shaft
- transmission ratio 34.73
- gear reducer mounting position B3
- output flange F416
- adapter AB16DN145 suitable for standard NEMA 145TC motor

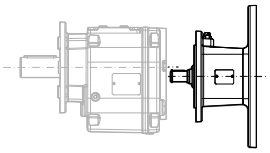

UT.C 2565

5.1.10 Bevel helical designation examples - iO

Example 1: bevel helical gearmotor

iO	5	7	3	FA	-	19.34	-	B3	-	SA	-	F525	-	B16D

- bevel helical gearmotor size iO 57
- 3 reduction stages
- design with flange
- imperial shaft
- transmission ratio 19.34
- gear reducer mounting position B3
- solid low speed shaft S in A position
- output flange F525
- compact motor with mounting position B16D

Compact motor designation compatible with above coded gear reducer follows

HB	3	Z	90S	-	4	230.460	60	-	B16D	-	TB0

- motor type HB, with premium efficiency IE3, brake type
- motor size 90S
- number of poles 4
- supply voltage 230-460 V at 60 Hz
- compact motor with mounting position B16D
- terminal box position TB0

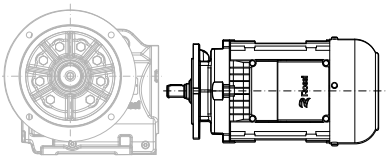

UT.C 2535

Example 2: bevel helical gearmotor with NEMA adapter

iO	4	7	3	SA	-	19.58	-	B3	-	HBB	-	AB16DN145

- bevel helical gearmotor size iO 47
- 3 reduction stages
- shaft mounted design
- imperial shaft
- transmission ratio 19.58
- gear reducer mounting position B3
- hollow low speed shaft with shrink disc HB in B position
- adapter AB16DN145 suitable for standard NEMA 145TC motor

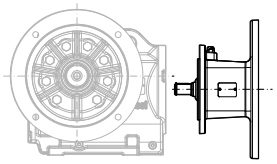

UT.C 2566

5.1.11 Parallel shaft helical designation examples - iP

Example 1: Parallel shaft helical gearmotor

iP	5	7	3	PA	-	38.21	-	B3	-	S	-	B16D

- parallel shaft helical gearmotor size iP 57
- 3 reduction stages
- foot mounted design
- imperial shaft
- transmission ratio 19,34
- gear reducer mounting position B3
- solid low speed shaft S
- compact motor with mounting position B16D

Compact motor designation compatible with above coded gear reducer follows

HB	3	Z	90S	-	4	230.460	60	-	B16D	-	TB0

- motor type HB, with efficiency IE3, brake type
- motor size 90S
- number of poles 4
- supply voltage 230-460 V at 60 Hz
- compact motor with mounting position B16D
- terminal box position TB0

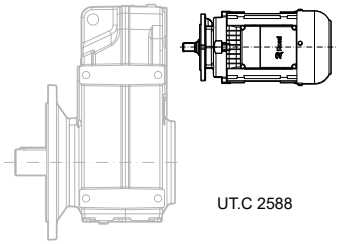

Example 2: Parallel shaft helical gearmotor with NEMA adapter

iP	5	7	3	PA	-	38.21	-	B3	-	S	-	AB16GN213

- parallel shaft helical gearmotor size iP 57
- 3 reduction stages
- foot mounted design
- imperial shaft
- transmission ratio 38.21
- gear reducer mounting position B3
- solid low speed shaft S
- adapter AB16GN213 suitable for standard NEMA 213TC motor

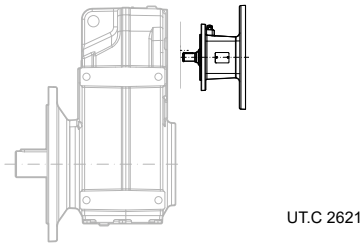

5.2

Nameplate data

5.2.1 Gear reducer nameplate

Every gear reducer is provided with a name plate in anodized aluminium containing main informations necessary for a correct identification of the product.
The name plate must not be removed and must be kept integral and readable.
All name plate data must be specified on eventual spare part orders.

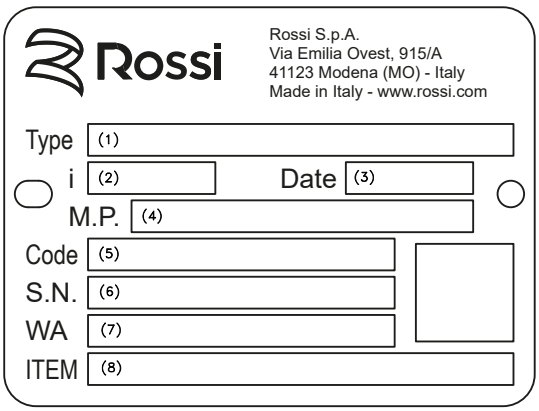

(1) Gear reducer type
(2) Transmission ratio
(3) Production date
(4) Gear reducer mounting position
(5) Product code
(6) Serial number
(7) Production batch
(8) Customer code [1]

5.2.2 Motor nameplate

The motor is provided with a nameplate in anodized aluminium containing main information necessary for a correct identification of the project.
The name plate must not be removed and must be kept integral and readable.
All name plate data must be specified on eventual spare part orders.

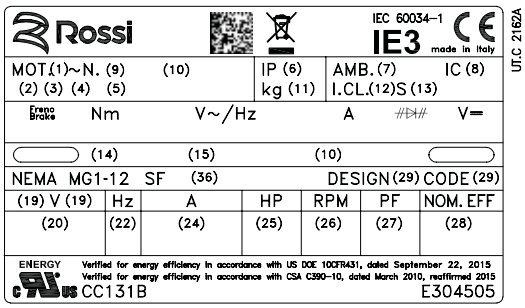

HB

(1) Number of phases
(2) Motor type
(3) Frame size
(4) Number of poles
(5) Mounting position designation position
(6) Protection IP
(7) Ambient temperature maximum
(8) IC code
(9) Production batch
(10) Two months, year of manufacturing and serial number
(11) Motor mass
(12) Insulation class I.CL.
(13) Duty cycle S...
(14) Motor code
(15) Customer code [1]
(16) Bearings
(17) Additional note
(18) Additional note
(19) Connection of the phases
(20) Rated voltage
(21) Voltage tolerance
(22) Nominal frequency
(23) Frequency tolerance
(24) Nominal current
(25) Nominal power
(26) Rated speed
(27) Nominal power factor
(28) Nominal efficiency IEC 60034-2-1
(29) Design - code
(36) Service factor

[1] On request

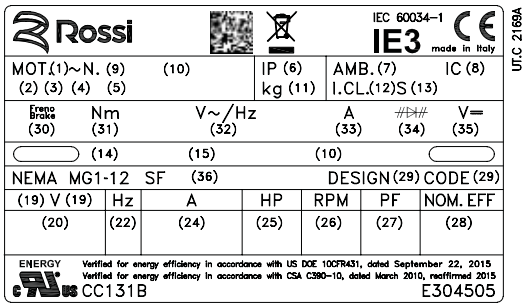

HBZ

(1) On request

(1) Number of phases
(2) Motor type
(3) Frame size
(4) Number of poles
(5) Mounting position designation position
(6) Protection IP
(7) Ambient temperature maximum
(8) IC code
(9) Production batch
(10) Two months, year of manufacturing and serial number
(11) Motor mass
(12) Insulation class I.CL.
(13) Duty cycle S...
(14) Motor code
(15) Customer code (1)
(16) Bearings
(17) Additional note
(18) Additional note
(19) Connection of the phases
(20) Rated voltage
(21) Voltage tolerance
(22) Nominal frequency
(23) Frequency tolerance
(24) Nominal current
(25) Nominal power
(26) Rated speed
(27) Nominal power factor
(28) Nominal efficiency IEC 60034-2-1
(29) Design - code
(30) Brake size
(31) Braking torque
(32) Supply of rectifier
(33) Current absorbed by brake
(34) Nominal d.c. voltage supply of brake
(35) Nominal d.c. voltage of brake supply
(36) Service factor

6

Project Planning

Section contents

6.1	Selection	52
6.1.1	Selection data	52
6.1.2	Gearmotor size selection	52
6.1.3	Verifications	53
6.1.4	Start and stop overloads	53
6.1.5	Operation with brake motor	54
6.1.6	Considerations on motor power	54
6.2	Service factor SF	55
6.3	Efficiency	56
6.4	Thermal power Pt	57
6.5	Radial loads on low speed shaft end	60
6.5.1	General	60
6.5.2	Determination of applied radial load	60
6.5.3	Permissible radial load	60
6.5.4	Permissible axial load	61
6.5.5	Radial load not in center line	61
6.6	Directions of rotation of iO low speed shaft	63

6.1

Selection

6.1.1 Selection data

For a correct selection of gearmotor and drive, the following information about the application is required

Symbols	Description	Unit of Measure IMPERIAL
n_{2min}	minimum rotation speed required on low speed shaft	[rpm]
n_{2max}	maximum rotation speed required on low speed shaft	[rpm]
$P_{2-n2\,min}$	power required at low speed shaft at minimum speed	[hp]
$P_{2-n2\,max}$	power required at low speed shaft at maximum speed	[hp]
$T_{2-n2\,min}$	torque required at low speed shaft at minimum speed	[lb in]
$T_{2-n2\,max}$	torque required at low speed shaft at maximum speed	[lb in]
F_{a2}	axial loads on low speed shaft	[lb]
F_{r2}	radial loads on low speed shaft	[lb]
WK^2	external moment of inertia of mass (couplings, driven machine)	[lb ft^2]
T_{amb}	(maximum and minimum) ambient temperature	[°F]
H	installation altitude	[ft]
$S1, S2,..$	duty cycle	[%]
z	number of starts per hour	[start/h]
f	supply frequency	[Hz]
U_{mot}	motor supply voltage	[V]
U_f	brake supply voltage	[V]
T_b	braking torque	[lb in]
$B3 \ldots V6$	gearmotor mounting position	

6.1.2 Selection of gearmotor size

In order to select the most suitable gearmotor size for the application, you must:

1 have the necessary data as indicated in the previous paragraph:
- power P_2 required at gearmotor output;
- angular speed n_2,
- operating conditions (nature of the load, duration, frequency of starting z, other considerations).

2 determine service factor *SF* on the basis of running conditions (page 56).

3 select the gearmotor size on the basis of:
- n_2
- *SF*
- power P_1 equal or greater than P_2

If power P_2 required is the result of a precise calculation, the gearmotor should be selected on the basis of a power P_1 equal or greater than P_2 / η , where η = 0,97 ÷ 0,98 is gear reducer efficiency (page 56).
When for reasons of motor standardization, power P_1 available in catalog is much greater than the power P_2 required, the gearmotor can be selected on the basis of a lower service factor provided it is certain that this excess power available will never be required and frequency of starting z is low enough not to affect service factor (page 56).
Calculations can also be made on the basis of torque instead of power; this method is even preferable for low n_2 values.

6.1.3 Verifications

- Verify possible radial load F_{r2} referring to directions given on pages 60 and 61.
- For the motor, verify frequency of starting z when higher than that normally permissible, referring to directions and values given in ch. 2 cat. TX; this will normally be required for brake motors only.
- When a load chart is available, and/or there are overloads – due to starting on full load (especially with high inertias and low transmission ratios), braking, shocks, gear reducers in which the low speed shaft becomes driving member due to driven machine inertia, applied power higher than strictly required, other static or dynamic causes - verify that the maximum torque peak is always smaller than $\boldsymbol{1.6 \cdot T_{N2}}$ (where $T_{N2} = T_2 \cdot SF$).
  If higher or if it cannot be evaluated in the above cases, install safety devices so that $\boldsymbol{1.6 \cdot T_{N2}}$ will never be exceeded.

6.1.4 Start and stop overloads

Starting torque

When starting on full load (especially for high inertias and low transmission ratios) verify that starting torque $T_{2\ starting}$ is:

$$T_{2\ starting} = \left(\frac{T_{starting}}{T_N} \cdot T_{2\ available} - T_{2\ required} \right) \cdot \frac{WK^2_1}{WK^2_1 + WK^2_0} + T_{2\ required} < 1.6 \cdot T_{N2}$$

where

- $T_{2\ required}$ is the torque absorbed by the machine through work and frictions;
- $T_{2\ available}$ is the output torque due to motor nominal power;
- WK^2_0 is the moment of inertia (of mass) of the motor;
- WK^2_1 is the external moment of inertia (of mass) in $lb_f\ ft^2$ (gear reducers, couplings, driven machine) referred to the motor shaft $WK^2_1 = WK^2 / i^2$.

$M_{starting}/M_N$ is the ratio of motor peak (see cat. TX).

When seeking to verify that starting torque is sufficiently high for starting, take into account starting friction, if any, in evaluating M_2 required.

Braking torque

In case of **stopping machines with high kinetic energy** (high moments of inertia combined with high speeds) and **with brake motors**, verify braking stress by means of the formula

$$\left(\frac{T_b}{\eta} \cdot i + T_{2\ required} \right) \cdot \frac{WK^2_1}{WK^2_1 + WK^2_0} + T_{2\ required} < 1.6 \cdot T_{N2}$$

where

- T_b is the braking torque setting (see table on page 286)
- η is the efficiency
- i is the transmission ratio
- WK^2_0 is the moment of inertia (of mass) of the motor;
- WK^2_1 is the external moment of inertia (of mass) in $lb_f\ ft^2$ (gear reducers, couplings, driven machine) referred to the motor shaft $WK^2_1 = WK^2 / i^2$.

Attention:
Where no evaluation is possible, install safety devices which will keep values within $T_{2\ max} = 1.6 \cdot T_{N2}$

6.1.5 Operation with brake motor

Starting time t_a and revolutions of motor φ_{a1}

$$t_a = \frac{(WK^2_0 + WK^2_1) \cdot n_1}{25603 \cdot \left(T_{starting} - \frac{T_{2\,required}}{i} \right)} \quad [s] \qquad \varphi_{a1} = \frac{t_a \cdot n_1}{19.1} \quad [rad]$$

Braking time t_b and revolutions of motor φ_{b1}

$$t_b = \frac{(WK^2_0 + WK^2_1) \cdot n_1}{25603 \cdot \left(T_b + \frac{T_{2\,required}}{i} \right)} \quad [s] \qquad \varphi_{b1} = \frac{t_b \cdot n_1}{19.1} \quad [rad]$$

where:

- $T_{starting}$ is the motor starting torque $\left(\frac{63025 \cdot P_1}{n_1} \cdot \frac{T_{starting}}{T_N} \right)$
- T_b is the braking torque setting of the motor (see page 286)
- φ_{a1} is the revolution of motor during starting time t_a (see page 286)
- φ_{b1} is the revolution of motor during braking time t_b (see page 286)
- WK^2_0 is the moment of inertia (of mass) of the motor;
- WK^2_1 is the external moment of inertia (of mass) in lb ft² (gear reducers, couplings, driven machine) referred to the motor shaft.

For other symbols, see page 20 and table on page 48.

Assuming a regular air-gap and ambient humidity, and utilizing suitable electrical equipment, repetition of the braking action, as affected by variation in temperature of the brake and by the state of wear of friction surface, is approx $0{,}1 \cdot \varphi_{b1}$.

6.1.6 Considerations on motor power

Taking into account the efficiency of the gear reducer, and other drives – if any – **motor power** is to be as near as possible to the power rating required by the driven machine: accurate calculation is therefore recommended.

The power required by the machine can be calculated, taking into account its components:

- power due to the work to be done,
- power required to overcome friction (first detachment, sliding or rolling)
- power required to overcome inertia (especially when the mass and/or acceleration or deceleration is large);

or determined experimentally based on tests and comparisons with existing applications, amperometric and wattmetric readings.

Oversizing the motor involves:

- higher starting current and therefore larger fuse valves and conductor section;
- a higher operating cost as it worsens the power factor (cos φ) and also the efficiency;
- greater stress on the drive, causing danger of mechanical failure, drive being normally proportionate to the power rating required by the machine, not to motor power.

Only high values of ambient temperature, altitude, frequency of starting or other particular conditions require an increase in motor power.

6.2 Service factor

Service factor *SF* takes into account the different running conditions which the gearmotor must be referred to:

- nature of load;
- duration;
- frequency of starting;

and other consideration to be considered in the calculations of gear reducer selection and verification.
For a quick and rough selection, the following table gives the minimum service factor *SF* required according to the kind of the driven machine.

Load classification		Driven machine	*SF* ≥
I	**Uniform load** ($m_J \leq 0.3$)	Fans (small diameters)	
		Agitators (liquids at low and constant density)	
		Mixers (low density and uniform materials)	
		Belt conveyors (fine grade loose materials)	
		Auxiliary commands	
		Assembly lines	**1**
		Filling machines	
		Compressors	
		Centrifugal pumps (liquids with low and constant density)	
		Elevators	
		Escalations	
II	**Moderate overloads** ($m_J \leq 3$)	Fans (average diameters)	
		Agitators (liquids, high or variable density)	
		Mixers (variable density materials)	
		Belt conveyors (coarse bulk materials)	
		Translations	
		Dosing pumps	
		Gear pumps	
		Multi-cylinder piston pumps	**1.32**
		Centrifugal Pumps (high or variable density liquids)	
		Palletizers	
		Slewing gears	
		Palletizing equipments	
		Bottling machines	
		Hoists	
		Sliding doors	
III	**Heavy overloads** ($m_J \leq 10$)	Bucket elevators	
		Roller ways	
		Heavy duty mixers (solid and heterogeneous materials)	
		Bridge crane translations	
		Mechanisms (cranks, eccentrics)	**1.6**
		Shears (sheet metal)	
		Bending rolls	
		Centrifuges	
		Presses (crank, toggle, eccentric)	

For a more accurate calculation of the required service factor (especially considering the running hours), proceed as stated below

1) Calculate the mass acceleration factor $\boldsymbol{m_J}$:

$$m_J = \frac{WK^2_1}{WK^2_0}$$

where:

- WK^2_1 [lb ft²] is the external moment of inertia J (of mass; coupling, driven machine), referred to motor shaft $WK^2_1 = WK^2 / i^2$;
- WK^2_0 [lb ft²] is the moment of inertia (of mass) of motor (see. cat. TX) including brakes, flywheel, etc.
- i is the transmission ratio of selected gear reducer.

2) Select the proper overload class according to the acceleration mass factor m_J

$m_J \leq 0.3$ (uniform) **class I**
$m_J \leq 3$ (moderate overloads: ≈ 1.6 x normal) **class II**
$m_J \leq 10$ (heavy overloads: ≈ 2.5 x normal) **class III**

For m_J values higher than 10, in presence of high values of backlash for kinematic chain and/or high radial loads a specific evaluation has to be carried out: contact Rossi North America.

3) From the diagram below, according to the overload class, the running time and the starting frequency *z*, read off the service factor required.

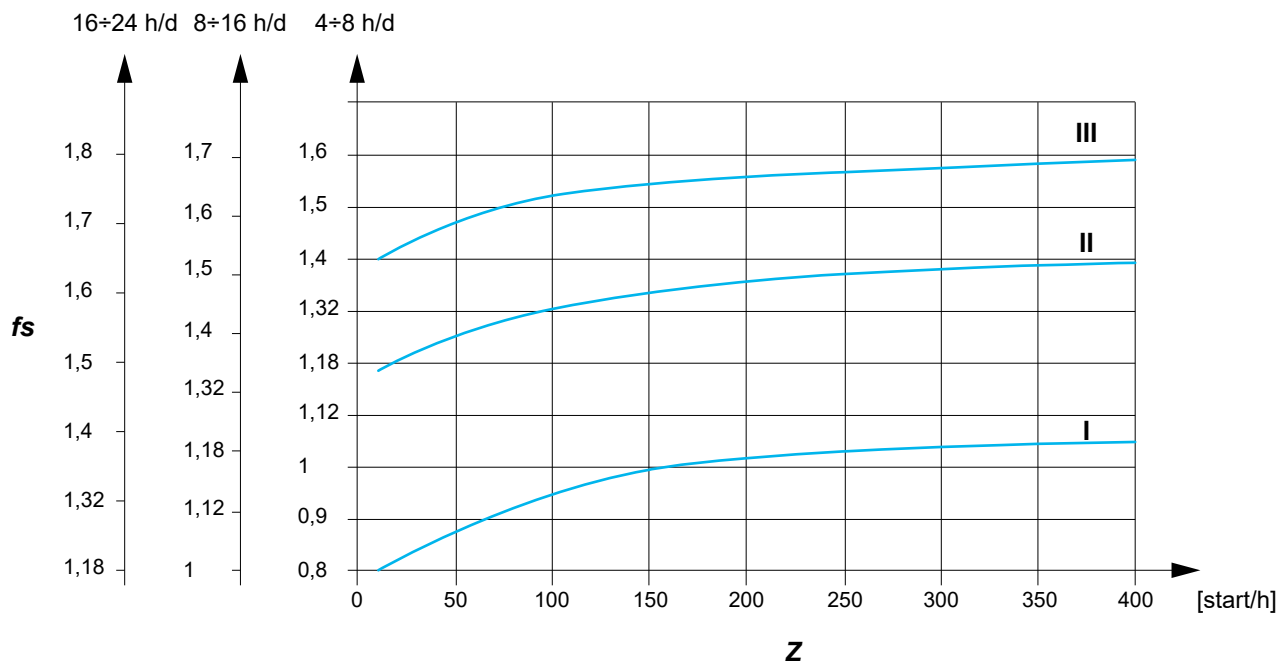

6.3 Efficiency

Gear reducer efficiency is determined by the friction of the sliding and rolling surfaces (gears, bearings and seals) and by the oil splash leakage of the lubricating oil.
The value of efficiency is influenced by operating conditions (load and speed) and can reach a maximum value up to

- maximum efficiency 0,96 (for 3 stages iC, iO and iP gear reducers)
- maximum efficiency 0,97 (for 2 stages iC and iP gear reducers).

The power loss due to efficiency is dissipated as heat flow through the outer surfaces of the gearmotor.

In order not to overheat the lubricant and seal material, **it must be ensured that the power applied does not exceed the heat dissipation capacity of the gearmotor.**

6.4 Thermal power

The nominal thermal power P_{TN} [hp] is that which can be applied at the gear reducer input, without exceeding 203 °F approximately oil temperature when operating in following running conditions:

- input speed n_1 = 1700 rpm (4 poles motor, 60 Hz);
- mounting position B3, B6, B7, B8;
- continuous duty *S1*;
- maximum ambient temperature 77 °F;
- maximum altitude 3300 ft m a.s.l.
- air speed ≥ 4 ft/s (typical value in presence of a gearmotor with self-cooled motor)

The gearmotor combinations shown in chapters 9, 11 and 13 are already thermally verified for all of the above conditions, including 2-pole combinations.

Otherwise it is necessary to verify that the applied power P_1 is less than or equal to the gearbox rated thermal power P_{TN} (indicated in the table) multiplied by the corrective coefficients f_{T1}, f_{T2}, f_{T3}, f_{T4}, f_{T5} (indicated in the tables) that take into account the different operating conditions:

$$P_1 \leq P_{TN} \cdot f_{T1} \cdot f_{T2} \cdot f_{T3} \cdot f_{T4} \cdot f_{T5}$$

If verification is not met, evaluate the use of special lubricants or heat exchanger cooling units, contact Rossi North America.

Thermal power needs not be taken into account when maximum duration of continuous running time is 1 ÷ 3 h, for all gear reducer sizes, followed by rest periods long enough to restore the gear reducer to near ambient temperature.
In case of maximum ambient temperature above 122 °F or below 32 °F, contact Rossi North America.

Nominal thermal power P_{TN} **[hp]:**

	P_{TN} [hp]							
	iC 27...	**iC 37...**	**iC 47...**	**iC 57...**	**iC 67...**	**iC 77...**	**iC 87...**	**iC 97...**
2	8.5	9	11.8	14	17	22.4	31.5	45
3	6.7	7.5	10.6	11.8	14	19	26.5	37.5

	P_{TN} [hp]						
	iO 373	**iO 473**	**iO 573**	**iO 673**	**iO 773**	**iO 873**	**iO 973**
3	7.1	9.5	11.2	13.2	19	31.5	42.5

	P_{TN} [hp]							
	iP 27...	**iP 37...**	**iP 47...**	**iP 57...**	**iP 67...**	**iP 77...**	**iP 87...**	**iP 97...**
2	7.75	9.75	11.8	15	17.5	28	41.2	56
3	5.8	7.1	8.75	11.8	13.2	20.6	30.7	41.2

Thermal factor f_{T1} according to input speed n_1:

	f_{T1} n_1 [min^{-1}]					
	710	**900**	**1120**	**1400**	**1700**	**2800**
iC, iP 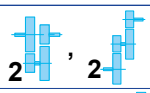	1.4	1.3	1.25	1.18	1	0.6
iC, iP 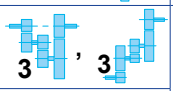	1.12	1.12	1.09	1.06	1	0.63
iO						

Thermal factor f_{T2} **according to ambient temperature** and **service**

$T_{amb\ max}$ °F	f_{T2} Continuous duty **S1**	Intermittent duty **S3 ... S6** Cyclic duration factor [%] for 60 min running			
		60	**40**	**25**	**15**
140	0.5	0.6	0.67	0.8	0.85
122	0.63	0.75	0.85	1	1.06
104	0.8	0.95	1.06	1.18	1.32
86	0.95	1.12	1.25	1.4	1.6
77	1	1.18	1.32	1.5	1.7
50	1.18	1.4	1.6	1.8	2

Thermal factor f_{T3} **according to mounting position:**

Mounting position	f_{T3} **iC 272 ... iC 972**	**iC 273 ... iC 973**
V5	0.8	0.9
V6	0.71	0.8

Mounting position	f_{T3} **iO 373 ... iO 973**
B6, V5	0.9
B7, B8, V6	0.8

Thermal factor f_{T4} **according to altitude:**

Altitude ft	f_{T4}
≤ 3300	**1**
3300 ÷ 6600	0.95
6600 ÷ 9800	0.9
9800 ÷ 13100	0.85
≥ 13100	0.8

Thermal factor f_{T5} **according to cooling air speed on housing:**

Air speed ft/s	Installation environment	f_{T5}
< 2	very small environment or without air movements or with protected gear reducer	[1]
2	very small environment and with limited air movements	0.71
3.15	wide environment without air movements (e.g. any presence of adapter)	0.9
4	wide environment with light air movements (e,g, gearmotor with self-cooled motor)	**1**
8	open and cooled	1.18
12.5	with heavy air movements	1.32

[1] Contact Rossi North America

6.5

Radial loads on low speed shaft end

6.5.1 General

Radial loads generated on the shaft end by a drive connecting gearmotor and machine must be less than or equal to those given at ch. 9, 11 and 13 as bearing life and wear (which also affects gears unfavourably) and low speed shaft strength clearly impose limits on permissible radial load.

6.5.2 Determination of the applied radial load

For the most common drives, radial load F_{r2} can be determined using the following formula where k takes on different values in relation to transmission type

$$F_{r2} = k \cdot \frac{2 \cdot T_2}{d} \quad \text{[lb]}$$

where:

- T_2 [lb in] is the torque required by the gearmotor low speed shaft;
- d [in] is the pitch diameter;
- k is a coefficient which assumes different values according to transmission type:
  - k = 1 for chain drive (lifting in general);
  - k = 1.5 for timing belt drive;
  - k = 2.5 for V-belt drive;
  - k = 1.1 for spur gear pair drive;
  - k = 3.55 for friction wheel drive.

6.5.3 Permissible radial load

The values of permissible radial load F_{r2} are indicated in the tables of ch. 9 (for iC gearmotors) or ch.11 (for iO gearmotors) or ch. 13 (for iP gearmotors) and are valid for foot mounted gearmotor design (P…).
These values are referred to gearmotor's output speed n_2 and torque T_2,considering overhung load acting on centre line of low speed shaft end, on A side (for iO gearmotors), in the most unfavorable direction of rotation and angular position of load.

If the exact direction of rotation and angular position of load are known, an increase of permissible radial load may be achieved.
On request, the option with strengthened bearings on low speed shaft is available (see page 44).
For the verification of each specific case contact Rossi North America with the notation shown in the figure.

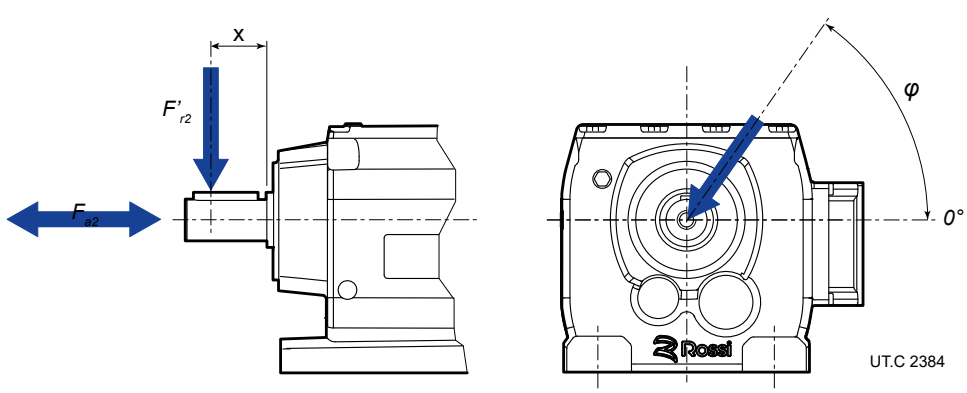

6.5.4 Permissible axial load

In absence of the radial load, an axial load may be acting on center line, not higher than 0,5 times the radial load stated in ch. 9. An **axial load** of up to 0,2 times the value in the table is permissible, simultaneously with the radial load, see ch. 9, 11 and 13.

If exceeded and/or for **misaligned axial loads**, contact Rossi North America.

6.5.5 Radial load not in center line

In the case of radial load acting in a position other than the centre line, i.e. at a distance from the shoulder other than 0,5 · E, you have to recalculate the permissible radial load value at distance x (F'_{r2x}) from the value given in chap. 9, 11 and 13 using the minimum value given by the following formulae.

Solid low speed shaft

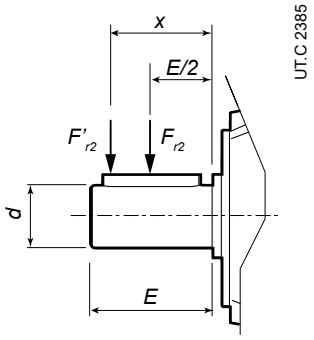

Hollow low speed shaft

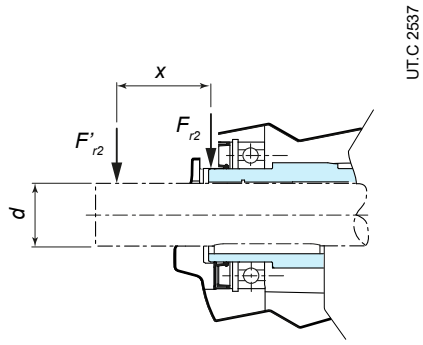

$$F'_{r2b} = F_{r2} \cdot \frac{E/2 + y}{x + y} \quad [\text{lb}]$$

$$F'_{r2s} = \frac{m}{4.448 \cdot (x + q)} [\text{lb}]$$

$$F'_{r2} = min\,(F'_{r2b}; F'_{r2s}) \quad [\text{lb}]$$

where

- F'_{r2b} [lb] is the permissible radial load, according to bearing life, acting at the distance *x* from shaft shoulder;
- F'_{r2s} [lb] is the permissible radial load, according to shaft strength, acting at the distance *x* from shaft shoulder;
- F_{r2} [lb] is the permissible radial load acting on center line of gearmotor low speed shaft end (see ch. 9, 11 and 13);
- F'_{r2} [lb] is the permissible radial load acting at the distance *x* from shaft shoulder;
- E [mm] is the gearmotor low speed shaft end length;
- *d* [mm] diameter of gearmotor low speed shaft end;
- *x* [mm] is the distance between the gearmotor low speed shaft shoulder and the load application point;
- *y* [mm] is a parameter that depends on the geometry of the gearmotor low speed shaft;
- *m* [N mm] is a parameter that depends on the geometry of the gearmotor low speed shaft;
- *q* [mm] is a parameter that depends on the geometry of the gearmotor low speed shaft.

Gearmotor size	*E/2 + y* mm	*y* mm	*m* N mm	*q* mm	*d* inch	*E* mm
iC 27...	106.5	81.5	155700	11.8	1	50
iC 37...	118	93	123500	0	1	50
iC 47...	137	107	243900	15	1.25	60
iC 57...	147.5	112.5	376300	18	1.375	70
iC 67...	168.5	133.5	264600	0	1.375	70
iC 77...	173.7	133.7	396800	0	1.625	80
iC 87...	216.7	166.7	845000	0	2.125	100
iC 97...	255.5	195.5	1060000	0	2.375	120

Gearmotor size	*E/2 + y* mm	*y* mm	*m* N mm	*q* mm	*d* inch	*E* mm
iO 373	123.5	98.5	130000	0	1	50
iO 473	153.5	123.5	140000	0	1.25	60
iO 573	169.7	134.7	270000	0	1.375	70
iO 673	181.3	141.3	412000	0	1.625	80
iO 773	215.8	165.8	769000	0	2	100
iO 873	252	192	1640000	0	2.375	120
iO 973	319	249	2800000	0	2.875	140

Gearmotor size	*E/2 + y* mm	*y* mm	*m* N mm	*q* mm	*d* mm	*E* mm
iP 27...	109,5	84,5	113000	0	25	50
iP 37...	123,5	98,5	107000	0	25	50
iP 47...	153,5	123,5	140000	0	30	60
iP 57...	170,7	135,7	270000	0	35	70
iP 67...	181,3	141,3	412000	0	40	80
iP 77...	215,8	165,8	787000	0	50	100
iP 87...	263	263	1060000	0	60	120
iP 97...	350	280	2090000	0	70	140

The table below shows when it is necessary to limit the admissible radial load.

Mounting surface	Gear units	Mounting position	Restriction
B3 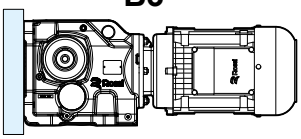	**iO 373** **...** **iO 973**	**B3**	In the case of wall mounting (as highlighted in Fig.), the admissible radial load Fr_2 specified in the selection tables is reduced by 50%.

6.6

Directions of rotation of iO low speed shaft

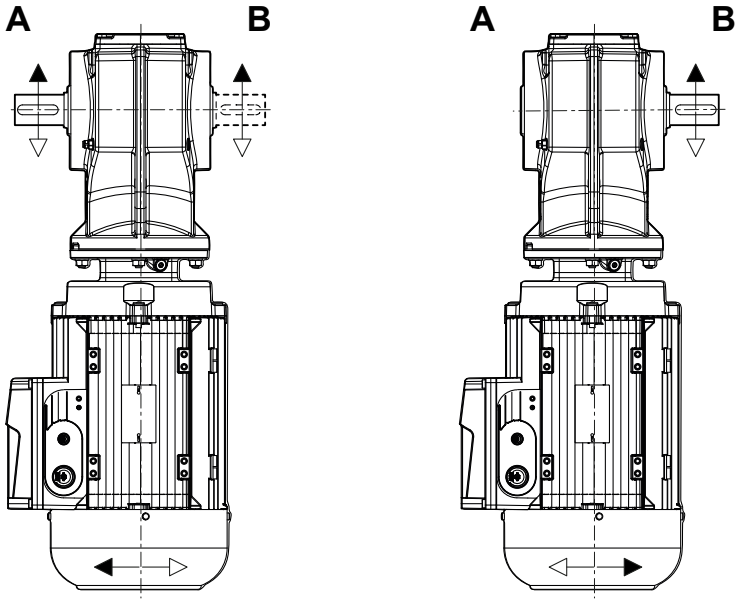

UT.C 2590

7

Mounting positions

Section contents

7.1	Mounting positions	66
7.1.1	General	66
7.1.2	Change of mounting position	69
7.1.3	Universal mounting position BX	69
7.2	Plug position	69
7.2.1	Positions of oil breather and drain plugs	69
7.2.2	Position of oil breather and drain plug of foot mounted helical inline gearmotor	71
7.2.3	Position of oil breather and drain plug of flange mounted helical inline gearmotor	72
7.2.4	Position of oil breather and drain plug of foot mounted bevel helical gearmotor	73
7.2.5	Position of oil breather and drain plug of flange mounted bevel helical gearmotor	74
7.2.6	Position of oil breather and drain plug of shaft mounted bevel helical gearmotor	75
7.2.7	Position of oil breather and drain plug of flange mounted parallel shaft helical gearmotor	76
7.2.8	Position of oil breather and drain plug of shaft mounted parallel shaft helical gearmotor	77

7.1

Mounting positions

7.1.1 General

The mounting positions below show the possible mounting positions of the different gearmotor designs by Rossi S.p.A.

Except specific needs, prefer mounting position B3 as it is the most advised from a technical and economic point of view:

- maximum simplification of lubrication system,
- less oil splash,
- less gear reducer heating;
- greater availability of stock products.

For inclined or oscillating mounting positions contact Rossi North America.

HELICAL INLINE GEARMOTORS - iC

PA - foot mounted design

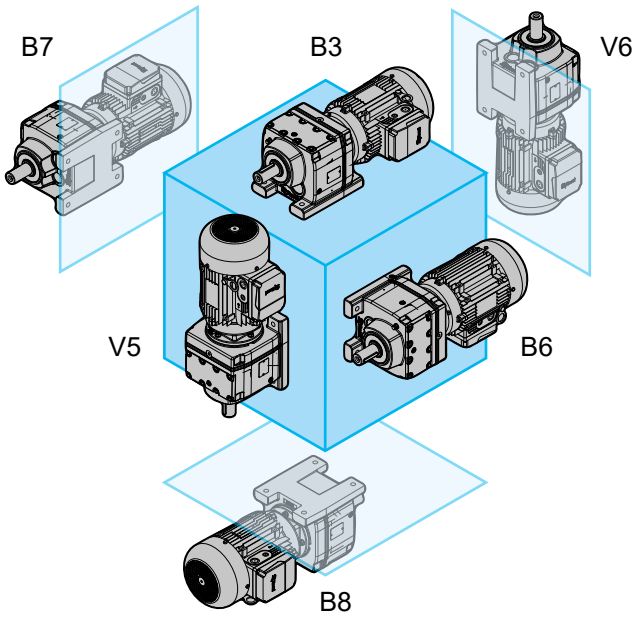

FA - flange mounted design

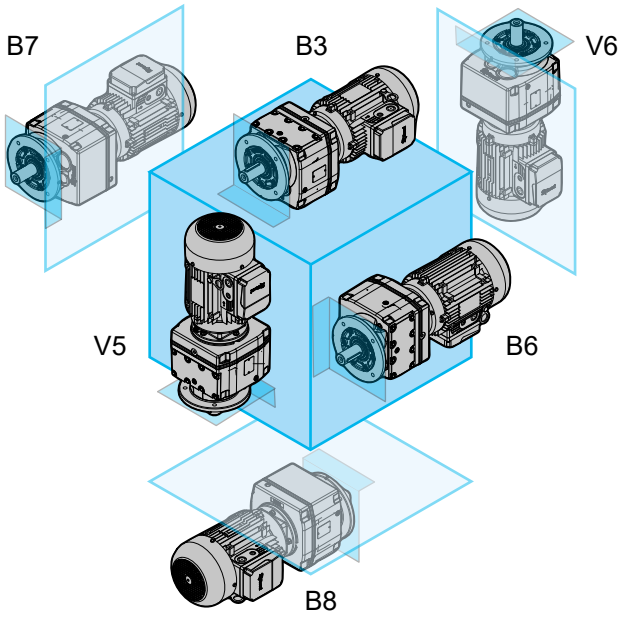

BEVEL HELICAL GEARMOTORS - iO

PA - foot mounted design

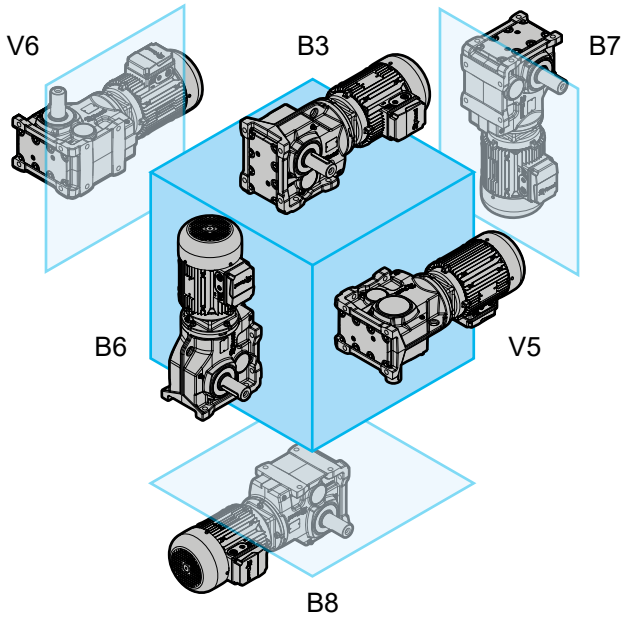

FA - flange mounted design

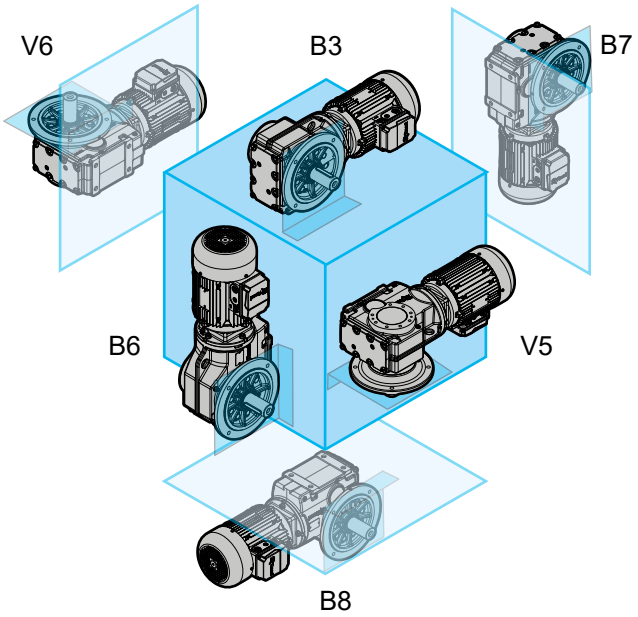

SA - shaft mounted design

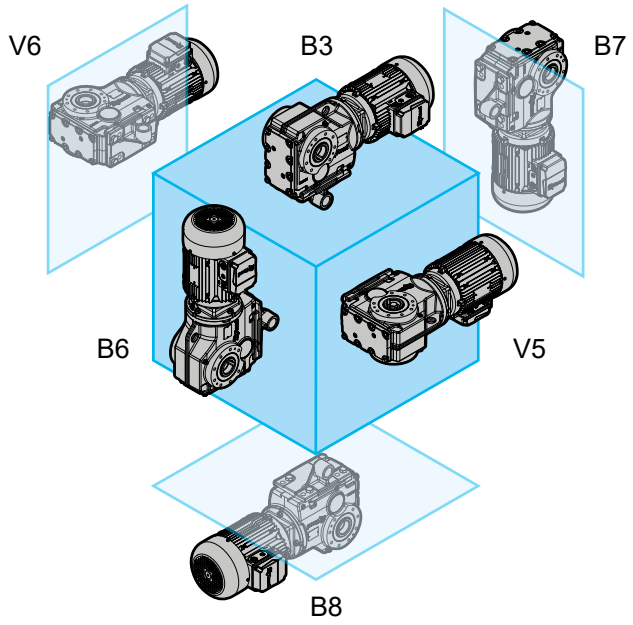

PARALLEL SHAFT HELICAL GEARMOTORS iP

PA - foot mounted design

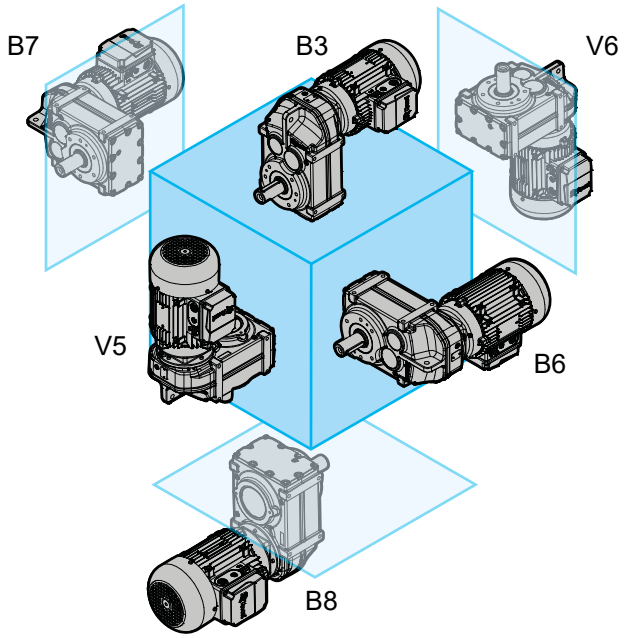

FA - flange mounted design

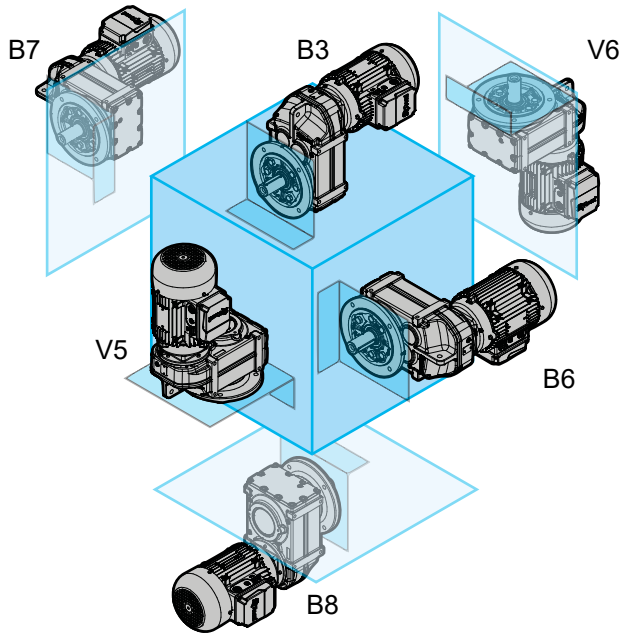

7.1.2 Change of mounting position

If gear reducer is installed in a mounting position differing from the one stated on name plate please follow these instructions:

- adjust the position of breather plug (see pages 71, 72 for helical inline iC, pages 73, 74, 75 for bevel helical iO and pages 76, 77 for parallel shaft helical iP)
- adjust lubricant quantity (see page 81) up to the oil level foreseen, checking that there are no more gas pockets in the oil which is included in the gear reducer
- for the changeover to mounting position V5 or V6 contact Rossi North America.

7.1.3 Universal mounting position BX

In this mounting position the gearmotors are supplied completely full of lubricant with all closed plugs, and with a loose breather plug as standard.

Before commissioning, please follow these instructions:

- position the breather plug correctly in the position foreseen by the operation mounting position (see pages 71, 72 for helical inline iC, pages 73, 74, 75 for bevel helical iO and pages 76, 77 for parallel shaft helical iP)
- adjust oil quantity according to operation mounting position (see page 81).

7.2 Plug position

7.2.1 Positions of breather and drain plug

The position of breather and drain plug depend from gearmotor mounting position, see following pages.
Following table shows when the breather or drain plugs lay on motor flange, according to gearmotor mounting position.

Mounting position		Position of breather plug	Position of drain plug
iC	iO		
B3, B6, B7, B8	B3, B8, V5, V6	in gear reducer housing	in gear reducer housing
V5	B6	in motor flange	in gear reducer housing
V6	B7	in gear reducer housing	in motor flange

When the breather plug or the drain plug are on motor flange, their angular position is determined on the basis of motor terminal box position.
All figures in this catalog represent breather and drain plugs with motor terminal box in standard TB0 position (see pages 43 and 71, 72, 73, 74, 75, 76, 77).
The exact position of the breather and drain plugs according to the position of the motor terminal box is shown on the next page.

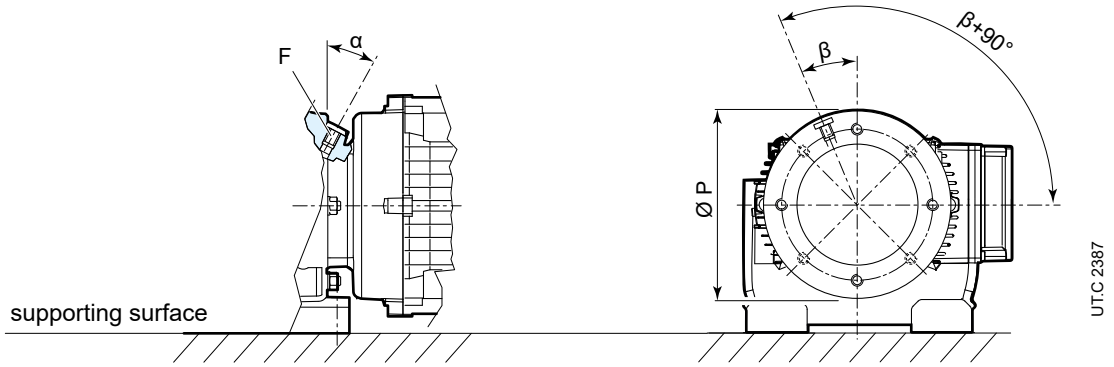

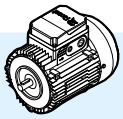	P Ø	α °	β °	F
63	120	0	45	M10x1
	160	0	45	M10x1
	200	30	22.5	M12x1.5
71	120	0	45	M10x1
	160	0	45	M10x1
	200	30	22.5	M12x1.5
80	120	15	22.5	M10x1
	160	30	22.5	M12x1.5
	200	30	22.5	M12x1.5
	250	30	22.5	M12x1.5
	300	90	22.5	M22x1.5
90	120	30	22.5	M10x1
	160	30	22.5	M10x1
	200	30	22.5	M12x1.5
	250	30	22.5	M12x1.5
	300	30	22.5	M22x1.5
100 112M 112MA	120	30	22.5	M10x1
	160	30	22.5	M10x1
	200	30	22.5	M12x1.5
	250	30	22.5	M12x1.5
	300	30	22.5	M22x1.5
112MB	160	30	22.5	M10x1
	200	30	22.5	M12x1.5
	250	30	22.5	M12x1.5
	300	30	22.5	M22x1.5
132S 132M 132MB	160	30	22.5	M10x1
	200	15	22.5	M12x1.5
	250	30	22.5	M12x1.5
	300	30	22.5	M22x1.5
132MC 160	200	30	22.5	M10x1
	250	30	22.5	M12x1.5
	300	30	22.5	M22x1.5
180	250	30	22.5	M12x1.5
	300	30	22.5	M22x1.5
200	250	30	22.5	M12x1.5
	300	30	22.5	M22x1.5

7.2.2 Position of breather and drain plug of foot mounted gearmotor

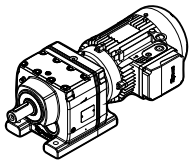

iC 27...PA / iC 97...PA

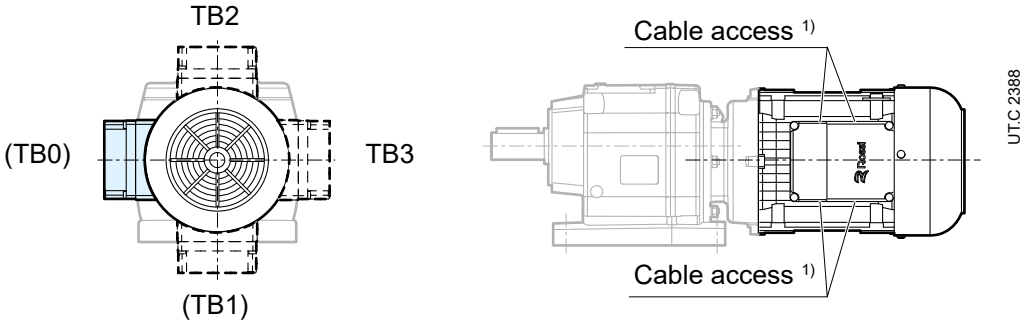

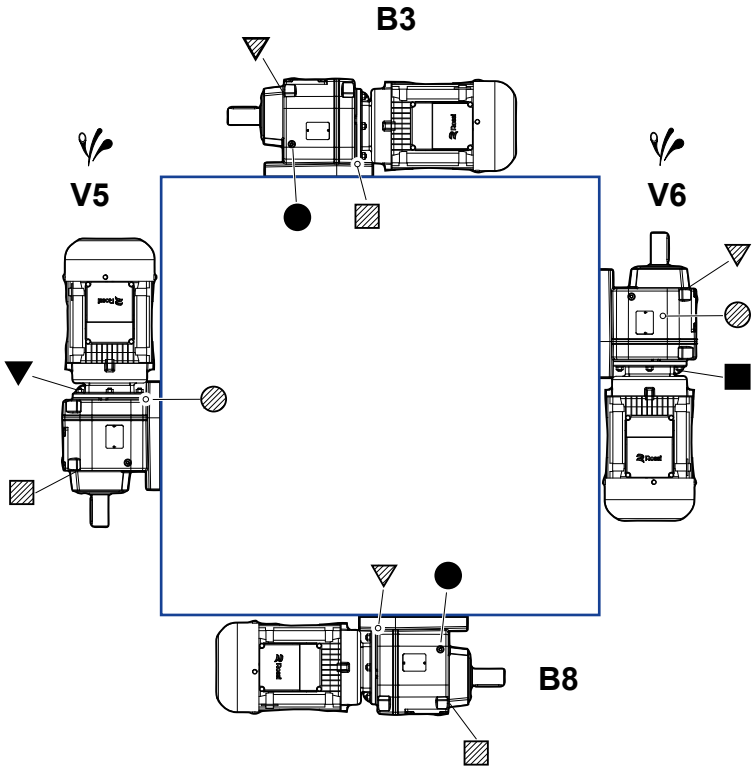

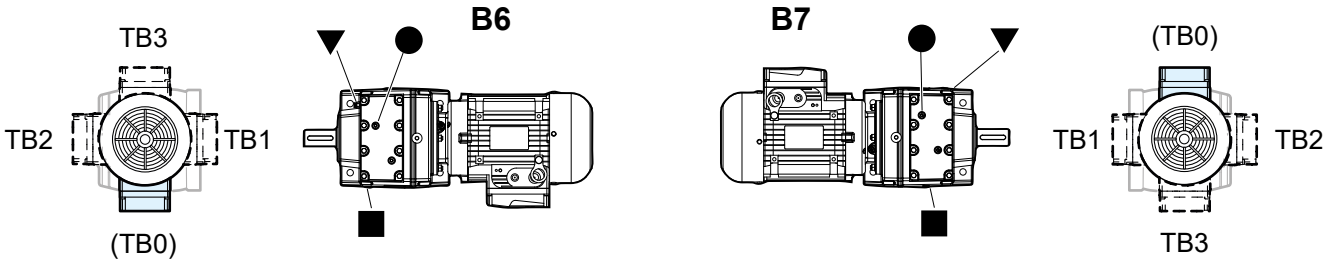

iC 27... : breather plugs not present for B3, B8, B6, B7

iC 27... : oil level and drain plugs not present

iC 47..., **iC 57**... : level plug not present for B6

- ▼ breather plug
- ● oil level plug
- ■ oil drain plug
- breather plug on opposite side (or not in view)
- oil level plug on opposite side (or not in view)
- oil drain plug on opposite side (or not in view)
- Possible high oil splash: for the corrective factor f_{t3} of nominal thermal power P_{tN} see page 57.

[1] Cable connection is by the customer: terminal box is integral with motor housing and equipped with knockout cable openings on both sides (one for power cable and one for auxiliary equipment).

7.2.3 Position of breather and drain plug of flange mounted gearmotor

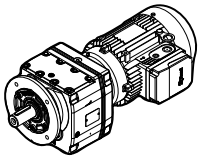

iC 27...FA / iC 97...FA

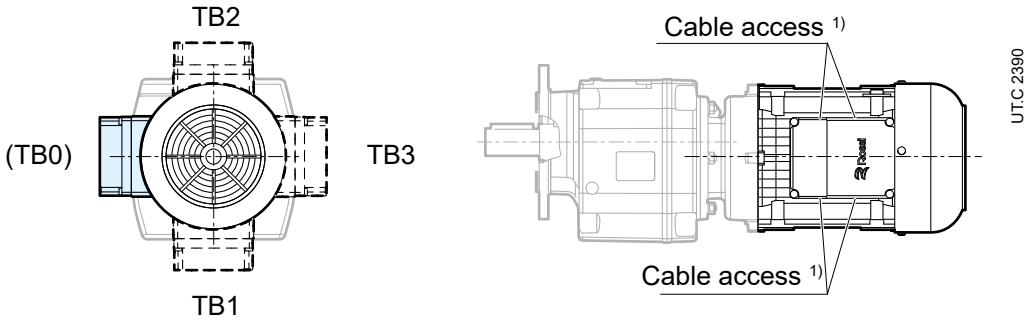

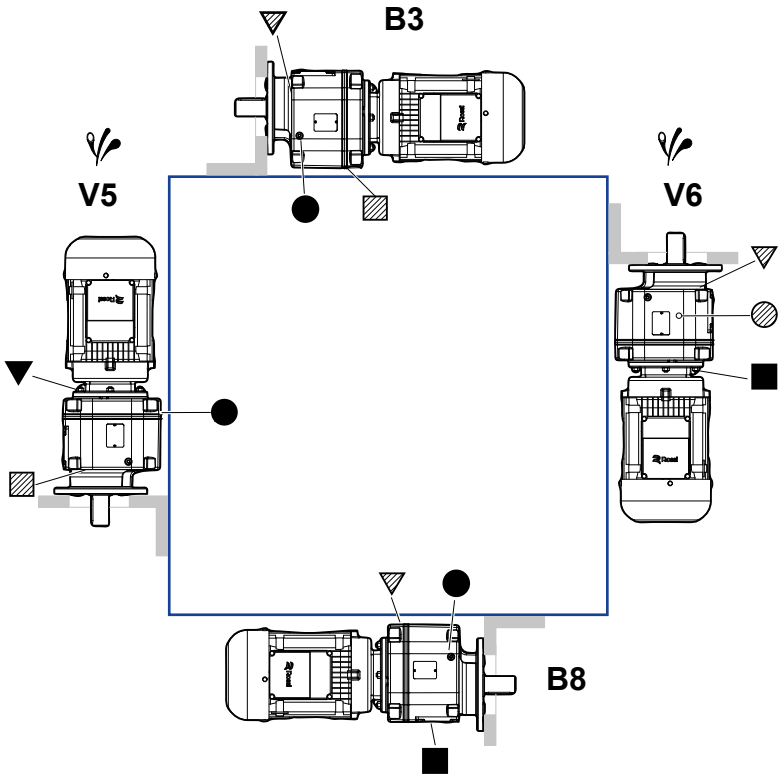

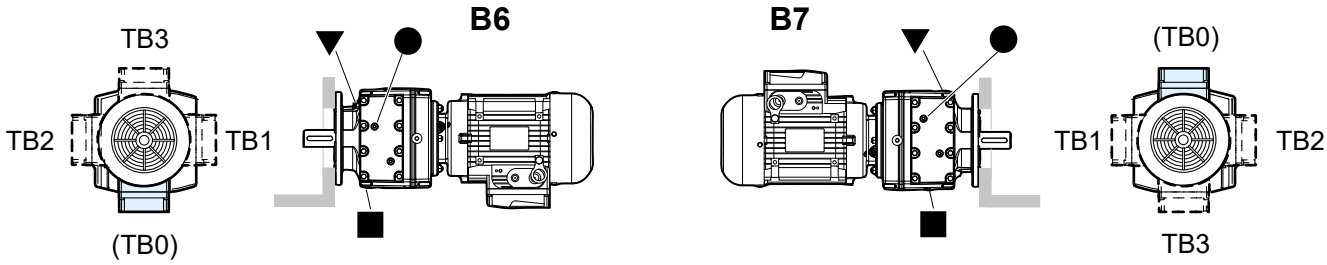

iC 27... : breather plugs not present for B3, B8, B6, B7

iC 27... : oil level and drain plugs not present

iC 47..., **iC 57**... level plug not present for B6

- ▼ breather plug
- ● oil level plug
- ■ oil drain plug
- breather plug on opposite side (or not in view)
- oil level plug on opposite side (or not in view)
- oil drain plug on opposite side (or not in view)
- Possible high oil splash: for the corrective factor f_{t3} of nominal thermal power P_{tN} see page 57.

[1] Cable connection is by the customer: terminal box is integral with motor housing and equipped with knockout cable openings on both sides (one for power cable and one for auxiliary equipment).

7.2.4 Position of breather and drain plug of foot mounted bevel helical gearmotor

iO 373 PA / iO 973 PA

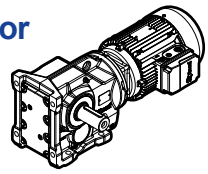

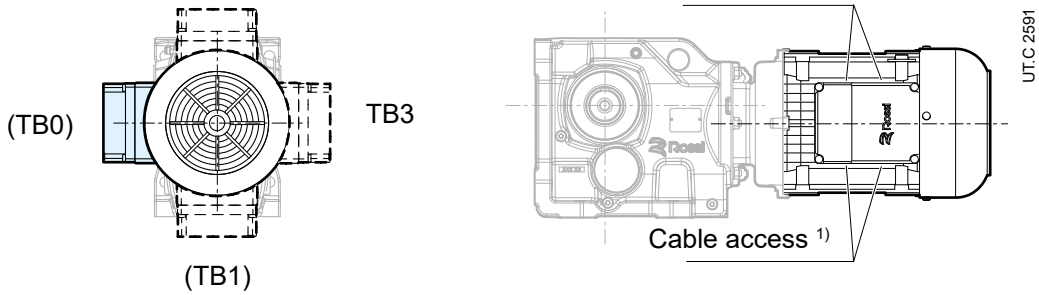

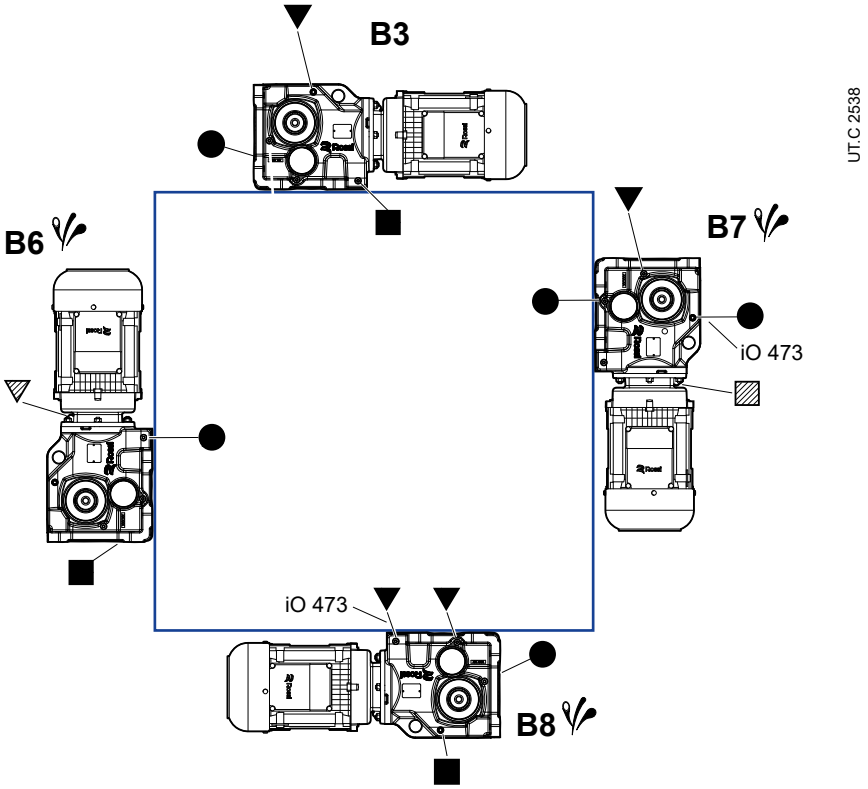

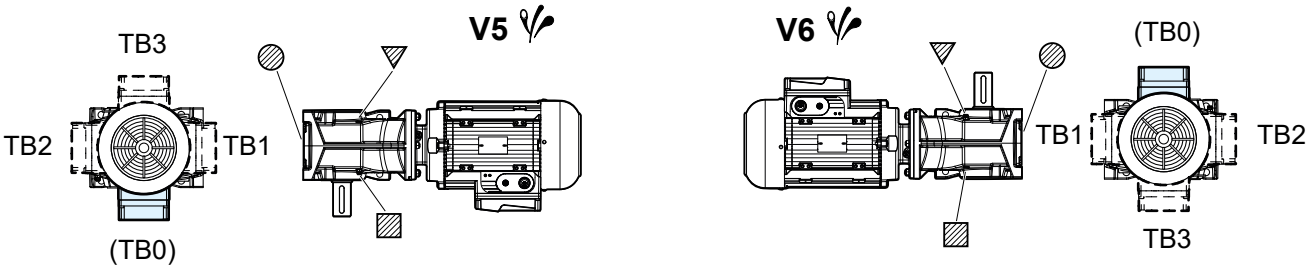

- ▼ breather plug
- ● oil level plug
- ■ oil drain plug
- breather plug on opposite side (or not in view)
- oil level plug on opposite side (or not in view)
- oil drain plug on opposite side (or not in view)
- Possible high oil splash: for the corrective factor f_{t3} of nominal thermal power P_{tN} see page 57.

[1] Cable connection is by the customer: terminal box is integral with motor housing and equipped with knockout cable openings on both sides (one for power cable and one for auxiliary equipment).

7.2.5 Position of breather and drain plug of flange mounted bevel helical gearmotor

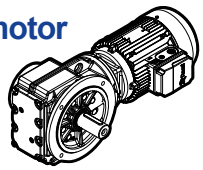

iO 373 FA / iO 973 FA

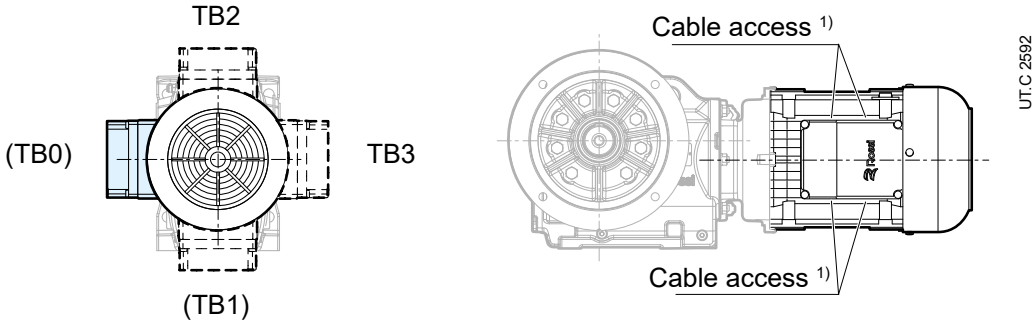

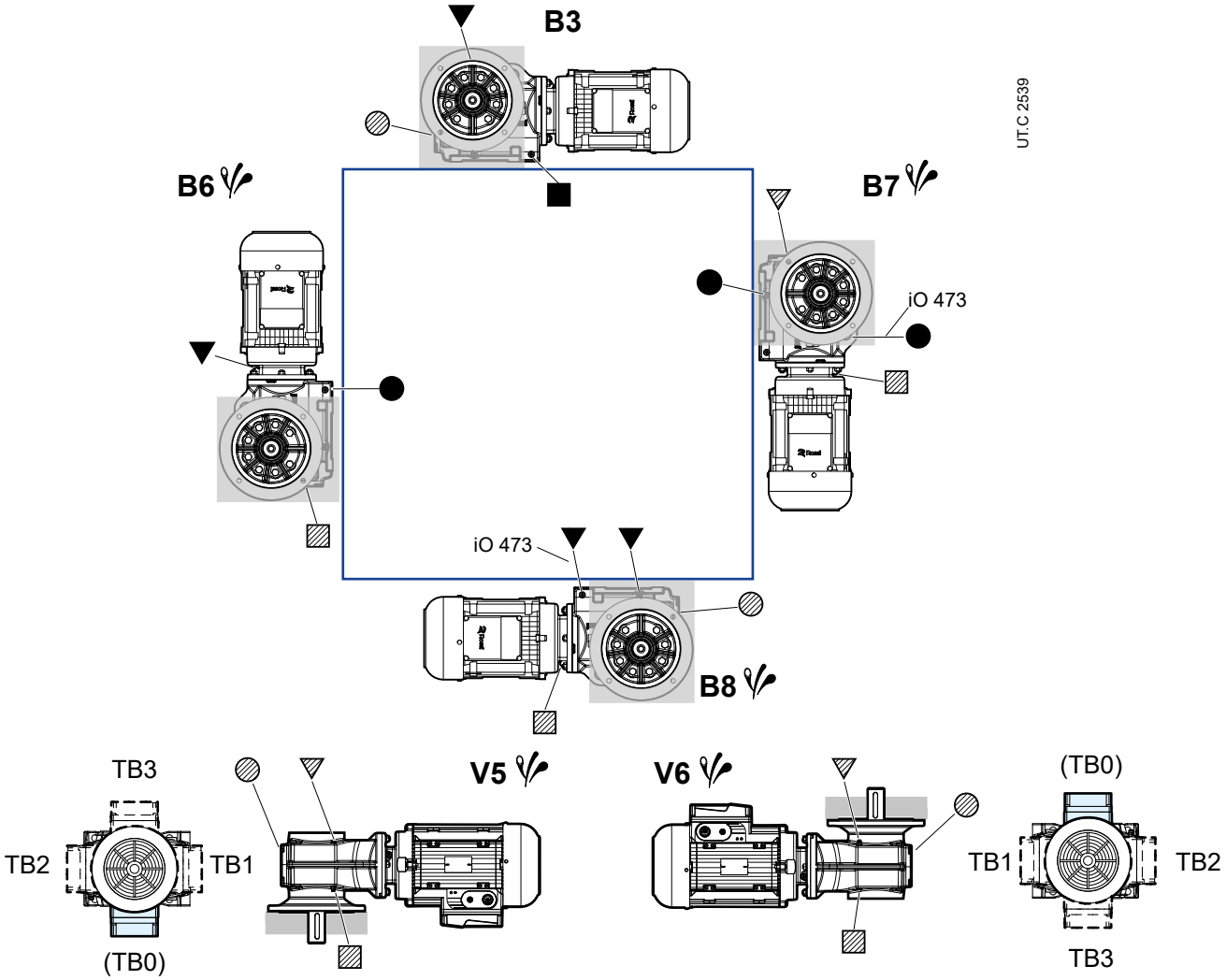

▼ breather plug
● oil level plug
■ oil drain plug

▽ breather plug on opposite side (or not in view)
◯ oil level plug on opposite side (or not in view)
▨ oil drain plug on opposite side (or not in view)

Possible high oil splash: for the corrective factor f_{t3} of nominal thermal power P_{tN} see page 57.

[1] Cable connection is by the customer: terminal box is integral with motor housing and equipped with knockout cable openings on both sides (one for power cable and one for auxiliary equipment).

7.2.6 Position of breather and drain plug of shaft mounted bevel helical gearmotor

iO 373 SA / iO 973 SA

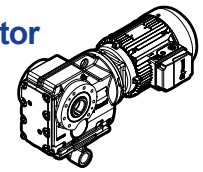

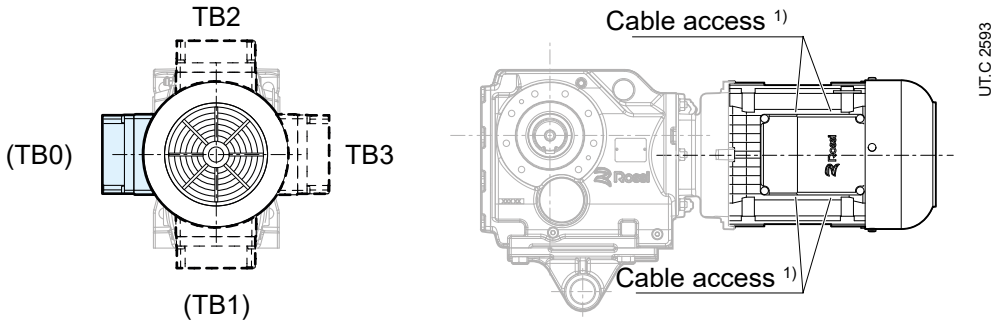

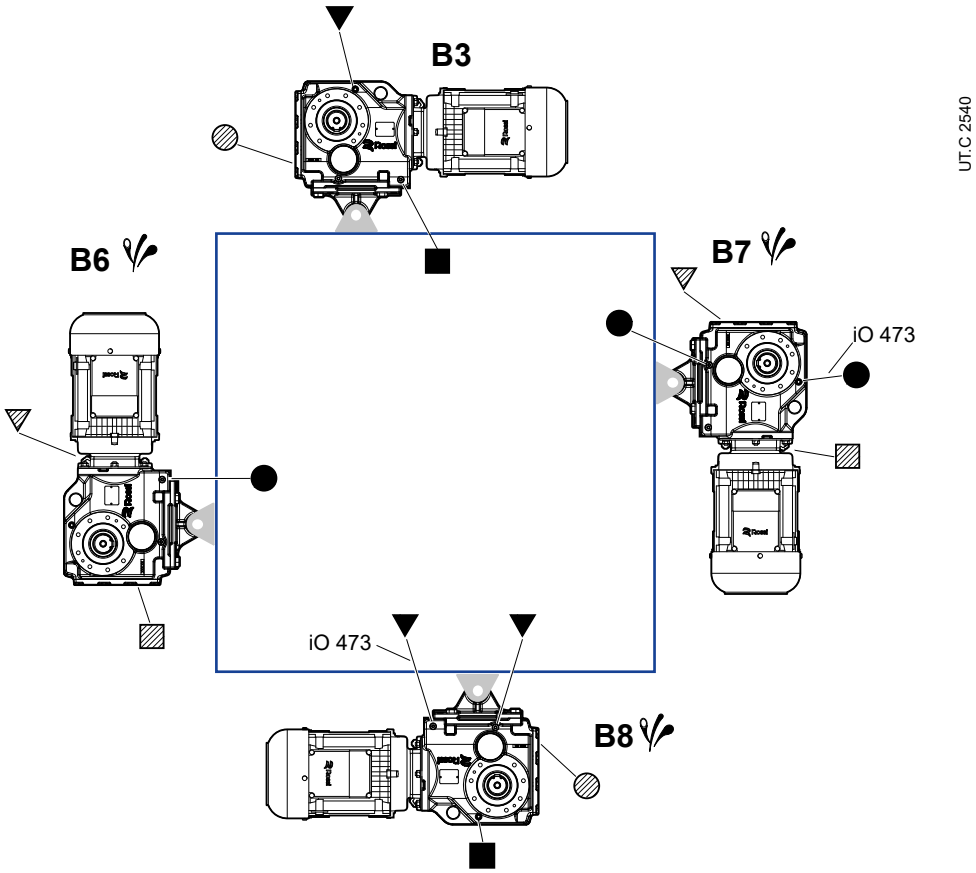

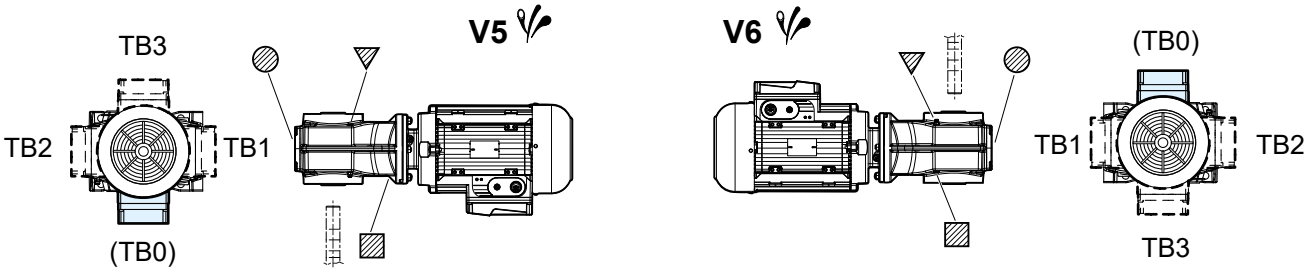

- ▼ breather plug
- ● oil level plug
- ■ oil drain plug
- breather plug on opposite side (or not in view)
- oil level plug on opposite side (or not in view)
- oil drain plug on opposite side (or not in view)
- Possible high oil splash: for the corrective factor f_{t3} of nominal thermal power P_{tN} see page 57.

[1] Cable connection is by the customer: terminal box is integral with motor housing and equipped with knockout cable openings on both sides (one for power cable and one for auxiliary equipment).

7.2.7 Position of breather and drain plug of flange mounted parallel shaft helical gearmotor

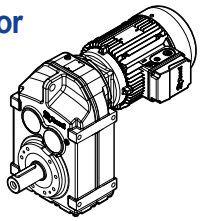

iP 273 PA / iP 973 PA

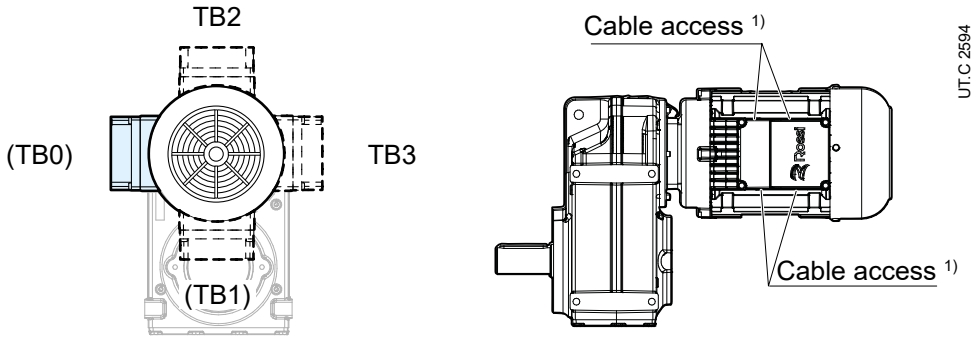

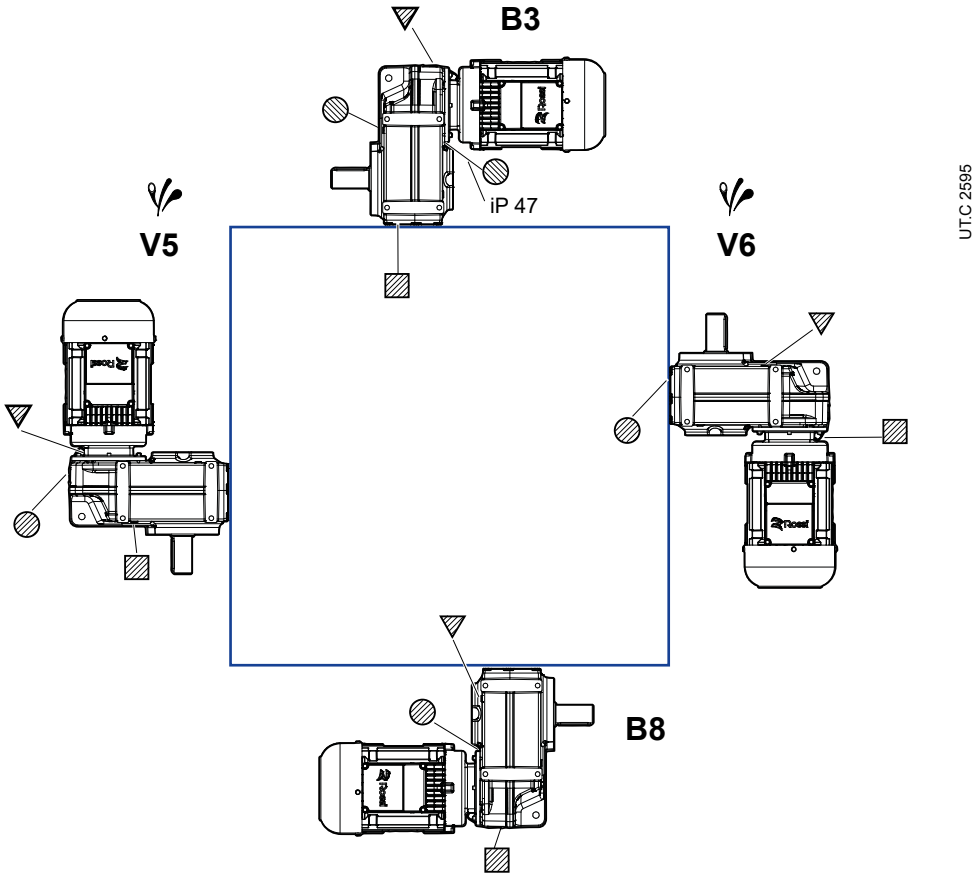

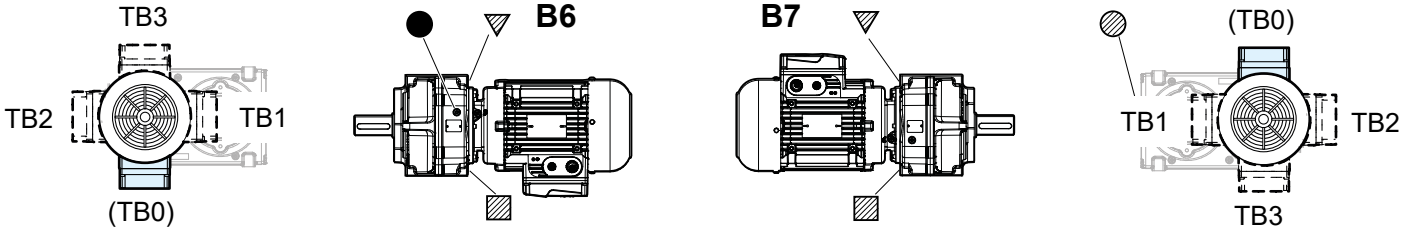

iP 27... : oil drain and breather plugs not present for B3, B8, B6, B7

iP 27... : oil level plugs not present

- ▼ breather plug
- ● oil level plug
- ■ oil drain plug
- ▽ breather plug on opposite side (or not in view)
- ◍ oil level plug on opposite side (or not in view)
- ▨ oil drain plug on opposite side (or not in view)

Possible high oil splash: for the corrective factor f_{t3} of nominal thermal power P_{tN} see page 57.

[1] Cable connection is by the customer: terminal box is integral with motor housing and equipped with knockout cable openings on both sides (one for power cable and one for auxiliary equipment).

7.2.8 Position of breather and drain plug of flange mounted parallel shaft helical gearmotor

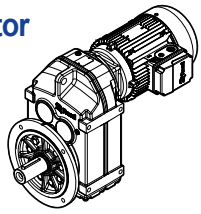

iP 273 FA / iP 973 FA

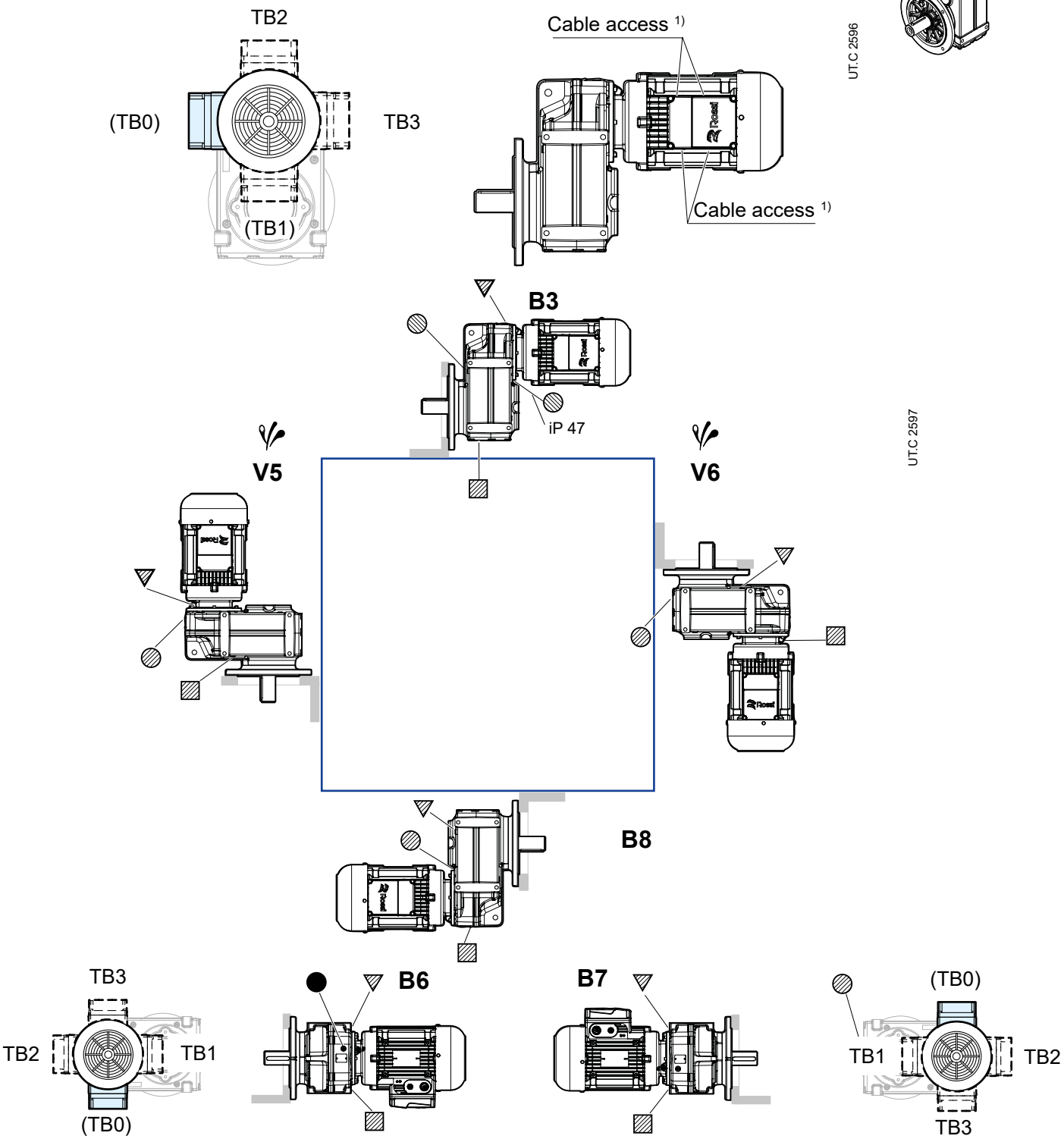

iP 27... : oil drain and breather plugs not present for B3, B8, B6, B7

iP 27... : oil level plugs not present

- ▼ breather plug
- ● oil level plug
- ■ oil drain plug
- ▽ breather plug on opposite side (or not in view)
- ◍ oil level plug on opposite side (or not in view)
- ▨ oil drain plug on opposite side (or not in view)
- Possible high oil splash: for the corrective factor f_{t3} of nominal thermal power P_{tN} see page 57.

[1] Cable connection is by the customer: terminal box is integral with motor housing and equipped with knockout cable openings on both sides (one for power cable and one for auxiliary equipment).

8

Structural and operational details

Section contents

8.1	Lubrication	80
8.1.1	General	80
8.1.2	Oil quantity	81
8.1.3	Lubricant table	82
8.1.4	ISO viscosity grade	82
8.1.5	Oil change interval	82
8.1.6	Plug with breather	82
8.2	Adapters for motors	83
8.2.1	Adapters for the assembly of standard IEC motors	83
8.2.2	Adapters for the assembly of standard NEMA C-Face motors	84
8.3	Assembling the motor (IEC or NEMA) on adapter	85
8.4	Details of gearmotor fastening flanges	86
8.5	Details of output fastening flanges	88
8.6	Dimensional tolerances	89
8.7	Overall dimensional remarks	90
8.7.1	Overall dimension details of HB and HBZ motors	90
8.7.2	Overall dimension details of accessories	90
8.7.3	Dimensional details of second motor shaft end	91
8.8	Protection covers	92
8.9	Fastening bolts	93

8.1

Lubrication

8.1.1 General

Gear lubrication is oil bath or splash lubrication, and bearings are splash lubricated or grease lubricated for “life” (with or without NILOS ring).
Unless otherwise stated, gearmotors are **supplied filled with synthetic oil** (KLÜBER KlüBersynth GH 6-220, MOBIL Glygoyle 220, SHELL Omala S4 WE 220), providing lubrication – assuming pollution-free surroundings – “long life”.

Ambient temperature range32 ÷ 104 °F with peaks of -4 °F and +122 °F.

Important:
the order-specific mounting position determines the quantity of lubricant supplied to the gear unit at the time of delivery as well as whether there are bearings with independent lubrication.
Always be sure that the gearmotor is located as per the mounting position ordered, which appears on the name plate.
If the gearmotor is installed in a different mounting position verify, according to the values given in the table, that the oil quantity doesn't change; if so, adjust it consequently.
In addition, the vertical V5 and V6 mounting position requires the application of special grease in the upper bearing.
The mounting position can be changed only with previous authorization by Rossi S.p.A., otherwise the warranty is void.

8.1.2 Oil quantity

Stated lubricant quantities are approximate and indicative for provisioning. The exact quantity the gear reducer is to be filled with is definitely given by the level.

PA; FA						
Gearmotor size	Oil quantities [US gal]					
	B3	B6	B7	B8	V5	V6
iC 27...	0.12	0.16	0.16	0.15	0.24	0.21
iC 37...	0.08	0.20	0.25	0.25	0.28	0.22
iC 47...	0.18	0.40	0.40	0.40	0.44	0.42
iC 57...	0.21	0.45	0.45	0.45	0.55	0.50
iC 67...	0.29	0.48	0.53	0.74	0.77	0.63
iC 77...	0.32	0.66	0.90	0.95	1.00	0.87
iC 87...	0.61	1.66	1.72	1.90	1.90	1.69
iC 97...	1.22	2.99	3.09	3.09	3.54	3.09

PA						
Gearmotor size	Oil quantities [US gal]					
	B3	B6	B7	B8	V5	V6
iO 373	0.13	0.33	0.26	0.26	0.25	0.25
iO 473	0.21	0.53	0.34	0.40	0.42	0.42
iO 573	0.29	0.74	0.58	0.58	0.61	0.55
iO 673	0.29	0.91	0.63	0.69	0.69	0.69
iO 773	0.58	1.53	1.08	1.16	1.11	1.16
iO 873	0.98	2.88	2.11	2.30	2.11	2.11
iO 973	1.85	5.28	3.70	4.15	4.15	4.09

FA…S						
Gearmotor size	Oil quantities [US gal]					
	B3	B6	B7	B8	V5	V6
iO 373	0.13	0.40	0.29	0.29	0.26	0.26
iO 473	0.21	0.58	0.34	0.45	0.42	0.42
iO 573	0.32	0.83	0.58	0.63	0.66	0.61
iO 673	0.29	0.98	0.63	0.74	0.71	0.71
iO 773	0.55	1.56	1.08	1.16	1.19	1.19
iO 873	0.98	3.14	2.17	2.38	2.22	2.22
iO 973	1.85	5.68	3.88	4.57	4.15	4.36

FA...H **SA**…H						
Gearmotor size	Oil quantities [US gal]					
	B3	B6	B7	B8	V5	V6
iO 373	0.13	0.37	0.26	0.26	0.26	0.26
iO 473	0.21	0.57	0.34	0.42	0.42	0.42
iO 573	0.32	0.83	0.58	0.63	0.71	0.63
iO 673	0.29	0.98	0.63	0.71	0.69	0.69
iO 773	0.55	1.56	1.08	1.22	1.16	1.16
iO 873	0.98	2.93	2.17	2.32	2.11	2.11
iO 973	1.85	5.28	3.88	4.15	4.15	4.15

PA...; **FA**...						
Gearmotor size	Oil quantity [US gal]					
	B3	B6	B7	B8	V5	V6
iP 27...	0.16	0.21	0.17	0.18	0.16	0.16
iP 37...	0.25	0.33	0.18	0.33	0.26	0.29
iP 47...	0.40	0.48	0.29	0.50	0.40	0.45
iP 57...	0.59	0.83	0.44	0.83	0.63	0.66
iP 67...	0.71	1.00	0.50	1.00	0.77	0.85
iP 77...	1.56	1.93	1.14	2.11	1.59	1.66
iP 87...	2.85	3.43	2.03	3.65	2.85	2.91
iP 97...	4.89	5.94	3.33	6.66	4.89	5.28

8.1.3 Lubricants table

Important:
Inappropriate lubricants can cause damage to the gear reducer.

The viscosity and type of lubricating oil used for filling **are indicated on the adhesive name plate on the gear reducer.**
Rossi S.p.A. declines any responsibility for damages deriving from the use of other lubricants or from the use outside the expected ambient temperature range. The indications on lubricants do not bind Rossi S.p.A. on the quality of the lubricant supplied by each respective manufacturer. Do not mix different lubricating oils; do not mix synthetic oils with mineral oils.

Brand	Synthetic PAO oil	Synthetic PAG oil	Mineral oil
AGIP	Blasia SX	Blasia S	Blasia
ARAL	Degol PAS	Degol GS	Degol BG
BP	Enersyn EPX	Enersyn SG-XP	Energol GR-XP
CASTROL	Alphasyn EP	Optiflex A	Alpha SP
FUCHS	Renolin Unisys	Renolin PG	Renolin CLP

Brand	Synthetic PAO oil	Synthetic PAG oil	Mineral oil
KLÜBER	Klübersynth GEM4	Klübersynth GH6	Klübersynth GEM1
MOBIL	Mobil SHC Gear	Mobil Glygoyle	Mobilgear 600 XP
SHELL	Omala S4 GX	Omala S4 WE	Omala S2 G
TEXACO	Pinnacle	Synlube CLP	Meropa
TOTAL	Carter SH	Carter SY	Carter EP

8.1.4 ISO viscosity grade

Unless otherwise specified, the gearmotors are **supplied complete with synthetic oil** of viscosity grade ISO VG 220 suitable for most applications in normal industrial environments. For different application conditions or specific needs, please contact Rossi North America.
The following table provides a general guideline for lubricant viscosity selection (average cSt value of kinematic viscosity at 104 °F).

Speed n_2 rpm	**Ambient temperature** T_{amb} °F		
	Mineral Oil		*Synthetic oil*
	32 ÷ 68	50 ÷ 104	32 ÷ 104
> 224	150	150	150
224 ÷ 22.4	150	220	220
22.4 ÷ 5.6	220	320	320
< 5.6	320	460	460

Ambient temperature peaks of ± 50 °F for mineral oils and ± 68 °F for synthetic oils are permissible with respect to the conditions given in the table.

8.1.5 Oil change intervals

An overall guide to oil-change interval is given in the table, and assumes pollution-free surroundings.
When heavy overloads are present, halve the values.

Oil temperature °F	**Oil change interval** [h]	
	Mineral Oil	*Synthetic oil*
≤ 149	8000	25000
149 ÷ 176	4000	18000
176 ÷ 203	2000	12500

Seal rings:
Duration depends on several factors such as dragging speed, temperature, ambient conditions, etc.; as a rough guide it can vary from 3150 to 25000 h.

8.1.6 Breather plugs

The gearmotors are supplied complete with a (metal) breather plug with valve mounted in the correct position according to the type of mounting position (except for type BX, see page 69).
Before commissioning it is necessary to activate the breather by tearing the closing tab on the plug.
It is necessary to keep the breather free from dirt that could compromise its functionality.
In case this is not possible, please contact Rossi North America to find a different solution.

8.2.1 Adapters for the assembly of standard IEC motors

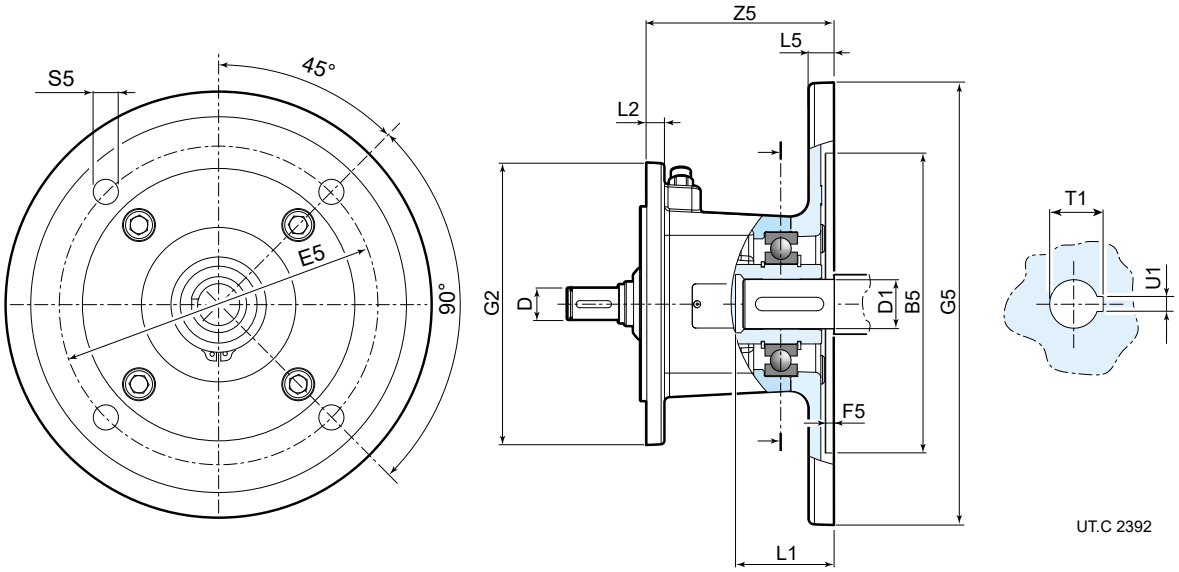

For identification of the suitable adapter code, use the compact motor mounting position and IEC motor size related to the selected combination within the selection tables in chapters 9, 11 e 13.

Gear reducer size	Mount. pos. of compact motor - IEC Motor size	Adapter code	B5 Ø H7	D Ø	D1 Ø F6	E5	F5	G2 Ø	G5 Ø	L1	L2	L5	S5 Ø	T1	U1 F9	Z5	lb
iC 27... iC 37... iO 373 iP 27 ... iP 37 ... iP 47 ...	B12B - 63	AB12BI063	95	10	11	115	4	120	140	27	8	10	8.5	12.8	4	56.5	5.7
	B12B - 71	AB12BI071	110	10	14	130	4.5	120	160	32	8	11	8.5	16.3	5	56.5	6.4
	B12C - 80	AB12CI080	130	12	19	165	4.5	120	200	41.5	8	12	11	21.8	6	111	14.1
	B12C - 90	AB12CI090	130	12	24	165	4.5	120	200	52	8	12	11	27.3	8	111	14.1
	B12D - 90	AB12DI090	130	14	24	165	4.5	120	200	52	8	12	11	27.3	8	111	14.1
	B12D - 100	AB12DI100	180	14	28	215	5	120	250	62	8	14	13	31.3	8	113	16.8
	B12E - 112	AB12EI100	180	16	28	215	5	120	250	62	8	14	13	31.3	8	113	16.8
iC 47... iC 57... iC 67... iO 473 iO 573 iO 673 iP 57 ... iP 67 ...	B16B - 63	AB16BI063	95	10	11	115	4	160	140	27	10	10	8.5	12.8	4	50.5	6.6
	B16B - 71	AB16BI071	110	10	14	130	4.5	160	160	32	10	11	8.5	16.3	5	50.5	7.1
	B16C - 80	AB16CI080	130	12	19	165	4.5	160	200	41.5	10	12	11	21.8	6	104	16.3
	B16C - 90	AB16CI090	130	12	24	165	4.5	160	200	52	10	12	11	27.3	8	104	16.3
	B16D - 90	AB16DI090	130	14	24	165	4.5	160	200	52	10	12	11	27.3	8	104	16.3
	B16D - 100	AB16DI100	180	14	28	215	5	160	250	62	10	14	13	31.3	8	106	19.0
	B16E - 112	AB16EI100	180	16	28	215	5	160	250	62	10	14	13	31.3	8	106	19.0
	B16F - 112	AB16FI112	180	18	28	215	5	160	250	62	10	14	13	31.3	8	106	19.0
	B16G - 132	AB16GI13S	230	22	38	265	5	160	300	82	10	16.5	13	41.3	10	145	30.0
iC 77... IO 773 iP 77 ...	B20B - 63	AB20BI063	95	10	11	115	4	200	140	27	12	10	8.5	12.8	4	44.5	8.4
	B20B - 71	AB20BI071	110	10	14	130	4.5	200	160	32	12	11	8.5	16.3	5	44.5	8.6
	B20C - 80	AB20CI080	130	12	19	165	4.5	200	200	41.5	12	12	11	21.8	6	98	17.9
	B20C - 90	AB20CI090	130	12	24	165	4.5	200	200	52	12	12	11	27.3	8	98	17.9
	B20D - 90	AB20DI090	130	14	24	165	4.5	200	200	52	12	12	11	27.3	8	98	17.9
	B20D - 100	AB20DI100	180	14	28	215	5	200	250	62	12	14	13	31.3	8	100	20.5
	B20E - 112	AB20EI100	180	16	28	215	5	200	250	62	12	14	13	31.3	8	100	20.5
	B20F - 112	AB20FI112	180	18	28	215	5	200	250	62	12	14	13	31.3	8	100	20.5
	B20G - 132	AB20GI13S	230	22	38	265	5	200	300	82	12	16.5	13	41.3	10	139	33.1
	B20H - 132	AB20HI13L	230	28	38	265	5	200	300	82	12	16.5	13	41.3	10	139	33.1
	B20H - 160	AB20HI160	250	28	42	300	6	200	350	112	12	18	18	45.3	12	186	58.6
iC 87... iO 873 iP 87 ...	B25C - 80	AB25CI080	130	12	19	165	4.5	250	200	41.5	14	12	11	21.8	6	94	20.3
	B25C - 90	AB25CI090	130	12	24	165	4.5	250	200	52	14	12	11	27.3	8	94	20.3
	B25D - 90	AB25DI090	130	14	24	165	4.5	250	200	52	14	12	11	27.3	8	94	20.3
	B25D - 100	AB25DI100	180	14	28	215	5	250	250	62	14	14	13	31.3	8	96	22.9
	B25E - 112	AB25EI100	180	16	28	215	5	250	250	62	14	14	13	31.3	8	96	22.9
	B25F - 112	AB25FI112	180	18	28	215	5	250	250	62	14	14	13	31.3	8	96	22.9
	B25G - 132	AB25GI13S	230	22	38	265	5	250	300	82	14	16.5	13	41.3	10	134	34.6
	B25H - 132	AB25HI13L	230	28	38	265	5	250	300	82	14	16.5	13	41.3	10	134	34.6
	B25H - 160	AB25HI160	250	28	42	300	6	250	350	112	14	18	18	45.3	12	181	63.3
	B25L - 180	AB25LI180	250	32	48	300	6	250	350	112	14	18	18	51.8	14	181	62.4
iC 97... iO 973 iP 97...	B30C - 80	AB30CI080	130	12	19	165	4.5	300	200	41.5	14	12	11	21.8	6	86	24.7
	B30C - 90	AB30CI090	130	12	24	165	4.5	300	200	52	14	12	11	27.3	8	86	24.7
	B30D - 90	AB30DI090	130	14	24	165	4.5	300	200	52	14	12	11	27.3	8	86	24.7
	B30D - 100	AB30DI100	180	14	28	215	5	300	250	62	14	14	13	31.3	8	88	27.3
	B30E - 112	AB30EI100	180	16	28	215	5	300	250	62	14	14	13	31.3	8	88	27.3
	B30F - 112	AB30FI112	180	18	28	215	5	300	250	62	14	14	13	31.3	8	88	27.3
	B30G - 132	AB30GI13S	230	22	38	265	5	300	300	82	14	16.5	13	41.3	10	129	39.7
	B30H - 132	AB30HI13L	230	28	38	265	5	300	300	82	14	16.5	13	41.3	10	129	39.7
	B30H - 160	AB30HI160	250	28	42	300	6	300	350	112	14	18	18	45.3	12	175	67.0
	B30L - 180	AB30LI180	250	32	48	300	6	300	350	112	14	18	18	51.8	14	175	67.0
	B30M - 200	AB30MI200	300	38	55 (E6)	350	6	300	400	113	14	18	18	59.3	16	205.5	88.2

8.2.2 Adapters for the assembly of standard NEMA C-Face motors

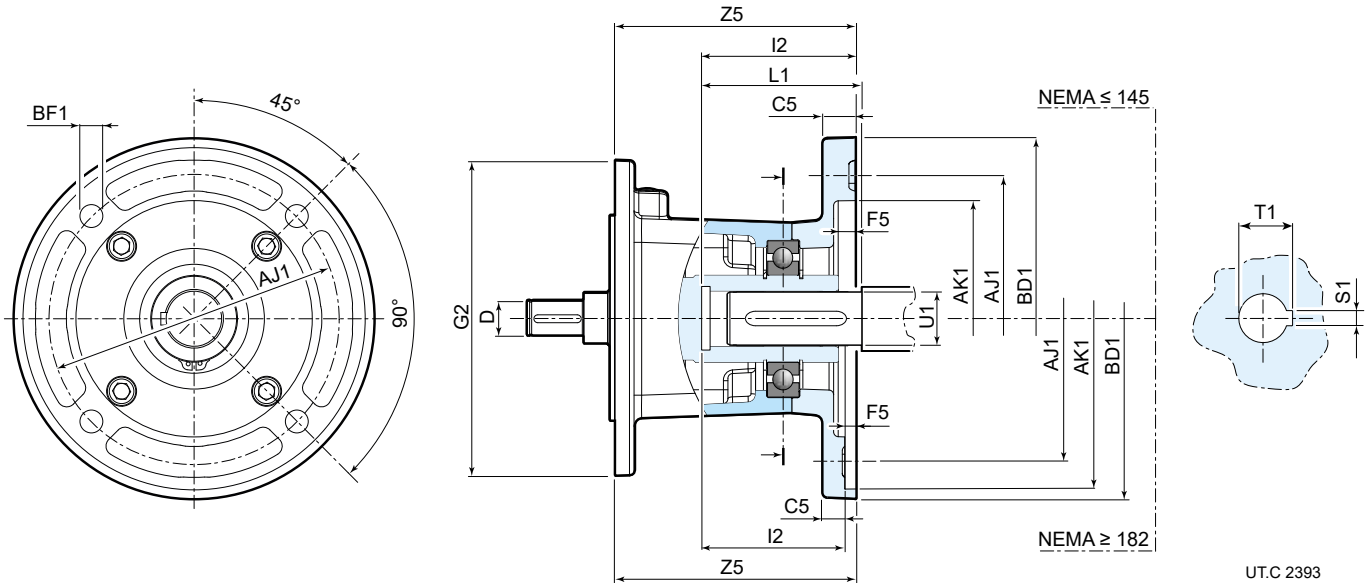

Gear reducer size	Mounting position of compact motor - NEMA C-face Motor size	Adapter code	AJ1 Ø inch	AK1 Ø inch	BD1 Ø inch	BF1 Ø	C5	D Ø	F5	G2 Ø	L1	I2	S1 inch	T1	U1 Ø inch	Z5	lb
iC 27... iC 37... iO 373 iP 27 ... iP 37 ... iP 47 ...	B12B - 56	AB12BN056	5 7/8	4 1/2	6.5	10.5	10	10	5	120	54.7	59.5	3/16	18	5/8	81	7.3
	B12C - 140	AB12CN143	5 7/8	4 1/2	6.5	10.5	12	12	5	120	64.2	61	3/16	24.5	7/8	113	12.8
	B12D - 140	AB12DN145	5 7/8	4 1/2	6.5	10.5	12	14	5	120	64.2	61	3/16	24.5	7/8	113	12.8
	B12E - 180	AB12EN182	5 7/8	4 1/2	9	14.5	14	16	5.5	120	79.2	76	1/4	31.5	1 1/8	124	17.9
iC 47... iC 57... iC 67... iO 473 iO 573 iO 673 iP 57 ... iP 67 ...	B16B - 56	AB16BN056	5 7/8	4 1/2	6.5	10.5	10	10	5	160	54.7	59.5	3/16	18	5/8	75	7.9
	B16C - 140	AB16CN143	5 7/8	4 1/2	6.5	10.5	12	12	5	160	64.2	61	3/16	24.5	7/8	106	15.0
	B16D - 140	AB16DN145	5 7/8	4 1/2	6.5	10.5	12	14	5	160	64.2	61	3/16	24.5	7/8	106	15.0
	B16E - 180	AB16EN182	7 1/4	8 1/2	9	14.5	14	16	5.5	160	79.5	76	1/4	31.5	1 1/8	117	20.1
	B16F - 180	AB16FN184	7 1/4	8 1/2	9	14.5	14	18	5.5	160	79.2	76	1/4	31.5	1 1/8	117	20.1
	B16G - 210	AB16GN213	7 1/4	8 1/2	9	14.5	14	22	5.5	160	97.3	91	5/16	38.6	1 3/8	152	26.7
iC 77... iO 773 iP 77 ...	B20B - 56	AB20BN056	5 7/8	4 1/2	6.5	10.5	10	10	5	200	54.7	59.5	3/16	18	5/8	69	9.5
	B20C - 140	AB20CN143	5 7/8	4 1/2	6.5	10.5	12	12	5	200	64.2	61	3/16	24.5	7/8	100	16.5
	B20D - 140	AB20DN145	5 7/8	4 1/2	6.5	10.5	12	14	5	200	64.2	61	3/16	24.5	7/8	100	16.5
	B20E - 180	AB20EN182	7 1/4	8 1/2	9	14.5	14	16	5.5	200	79.2	76	1/4	31.5	1 1/8	111	21.6
	B20F - 180	AB20FN184	7 1/4	8 1/2	9	14.5	14	18	5.5	200	79.2	76	1/4	31.5	1 1/8	111	21.6
	B20G - 210	AB20GN213	7 1/4	8 1/2	9	14.5	14	22	5.5	200	97.3	91	5/16	38.6	1 3/8	146	29.8
	B20H- 250	AB20HN254	7 1/4	8 1/2	10	14.5	14	28	5.5	200	115.3	109	3/8	45.6	1 5/8	232	58.2
iC 87... iO 873 iP 87 ...	B25C - 140	AB25CN143	5 7/8	4 1/2	6.5	10.5	12	12	5	250	64.2	61	3/16	24.5	7/8	96	19.0
	B25D - 140	AB25DN145	5 7/8	4 1/2	6.5	10.5	12	14	5	250	64.2	61	3/16	24.5	7/8	96	19.0
	B25E - 180	AB25EN182	7 1/4	8 1/2	9	14.5	14	16	5.5	250	79.2	76	1/4	31.5	1 1/8	107	24.0
	B25F - 180	AB25FN184	7 1/4	8 1/2	9	14.5	14	18	5.5	250	79.2	76	1/4	31.5	1 1/8	107	24.0
	B25G - 210	AB25GN213	7 1/4	8 1/2	9	14.5	14	22	5.5	250	97.3	91	5/16	38.6	1 3/8	141	31.5
	B25H- 250	AB25HN254	7 1/4	8 1/2	10	14.5	14	28	5.5	250	115.3	109	3/8	45.6	1 5/8	227	62.6
	B25L- 280	AB25LN284	9	10 1/2	11.25	14.5	16	32	5.5	250	134.3	128	1/2	53.4	1 7/8	229	65.0
iC 97... iO 973 iP 97 ...	B30C - 140	AB30CN143	5 7/8	4 1/2	6.5	10.5	12	12	5	300	64.2	61	3/16	24.5	7/8	88	23.4
	B30D - 140	AB30DN145	5 7/8	4 1/2	6.5	10.5	12	14	5	300	64.2	61	3/16	24.5	7/8	88	23.4
	B30E - 180	AB30EN182	7 1/4	8 1/2	9	14.5	14	16	5.5	300	79.2	76	1/4	31.5	1 1/8	99	28.4
	B30F - 180	AB30FN184	7 1/4	8 1/2	9	14.5	14	18	5.5	300	79.2	76	1/4	31.5	1 1/8	99	28.4
	B30G - 210	AB30GN213	7 1/4	8 1/2	9	14.5	14	22	5.5	300	97.3	91	5/16	38.6	1 3/8	136	36.2
	B30H- 250	AB30HN254	7 1/4	8 1/2	10	14.5	14	28	5.5	300	115.3	109	3/8	45.6	1 5/8	221	66.6
	B30L- 280	AB30LN284	9	10 1/2	11.25	14.5	16	32	5.5	300	134.3	128	1/2	53.4	1 7/8	223	69.0
	B30M- 320	AB30MN324	11	12 1/2	14	18	20	38	5.5	300	150.3	144	1/2	59.7	2 1/8	208	90.4

8.3

Assembling the motor (IEC or NEMA) on adapter

Prior to fitting the customer-supplied motor, verify that the static bending torque T_{bend} generated by the weight of the motor on the adapter counterflange is below the permitted value $T_{bend\ max}$, shown in table below:

$T_{bend} < T_{bend\ max}$

where:

$T_{bend} = (G \cdot Y_G)$ [lb in]
G [lb] motor weight; numerically approximately equal to motor mass
Y_G [in] distance of motor center of gravity from flange surface

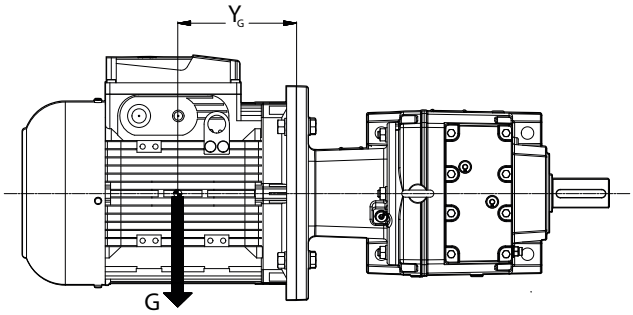

UT.C. 2440

Motors that are too long and too thin, even if the bending moment is below the prescribed table limits, can generate abnormal vibrations during operation.
In these cases, a suitable additional motor support must be provided (see specific motor documentation).
Loads above those permitted may be present in dynamic applications if the gearmotor is subject to translation, rotation or oscillation: contact Rossi North America to examine each individual case.

Maximum bending torque $T_{bend\ max}$ related to IEC motor adapter

IEC adapter code	Maximum bending torque $T_{bend\ max}$ [lb in]				
	iC 27, iC 37 iO 37, iP 27 ... iP 47	iC 47 ... iC 67 iO 47 ... iO 67 iP 57, iP 67	iC 77 iO 77 iP 77	iC 87 iO 87 iP 87	iC 97 iO97 iP 97
AB12BI063, AB12BI071, AB16BI063, AB16BI071, AB20BI063, AB20BI071	490				
AB12CI080, AB12DI090, AB16CI080, AB16DI090, AB20CI080, AB20DI090 AB25CI080, AB25DI090, AB30CI080, AB30DI090	800	2350			
AB12EI100, AB16EI100, AB16FI112, AB20EI100, AB20FI112 AB25EI100,AB25FI112, AB30EI100, AB30FI112	1770				
AB16GI13S, AB20GI13S, AB25GI13S, AB30GI13S		2550	7700		
AB20HI13L, AB25HI13L, AB30HI13L					
AB20HI160, AB25HI160, AB30HI160			8270	10200	
AB25LI180, AB30LI180					
AB30MI200					14550

Maximum bending torque $T_{bend\ max}$ related to NEMA motor adapter

NEMA adapter code	Maximum bending torque $T_{bend\ max}$ [lb in]				
	iC 27, iC 37 iO 37, iP 27 ... iP 47	iC 47 ... iC 67 iO 47 ... iO 67 iP 57, iP 67	iC 77 iO 77 iP 77	iC 87 iO 87 iP 87	iC 97 iO97 iP 97
AB12BN056, AB16BN056, AB20BN056	400				
AB12CN143, AB12DN145, AB16CN143, AB16DN145, AB20CN143 AB20DN145, AB25CN143, AB25DN145, AB30CN143, AB30DN145	635	2175			
AB12EN182, AB16EN182, AB16FN184, AB20EN182, AB20FN184, AB25EN182, AB25FN184, AB30EN182, AB30FN184	1420				
AB16GN213, AB20GN213, AB25GN213, AB30GN213		2200	5800		
AB20HN254, AB25HN254, AB30HN254		6550	8850		
AB25LN284, AB30LN284					
AB30MN324					12650

8.4

Details of gearmotor fastening flanges

Solid low speed shaft

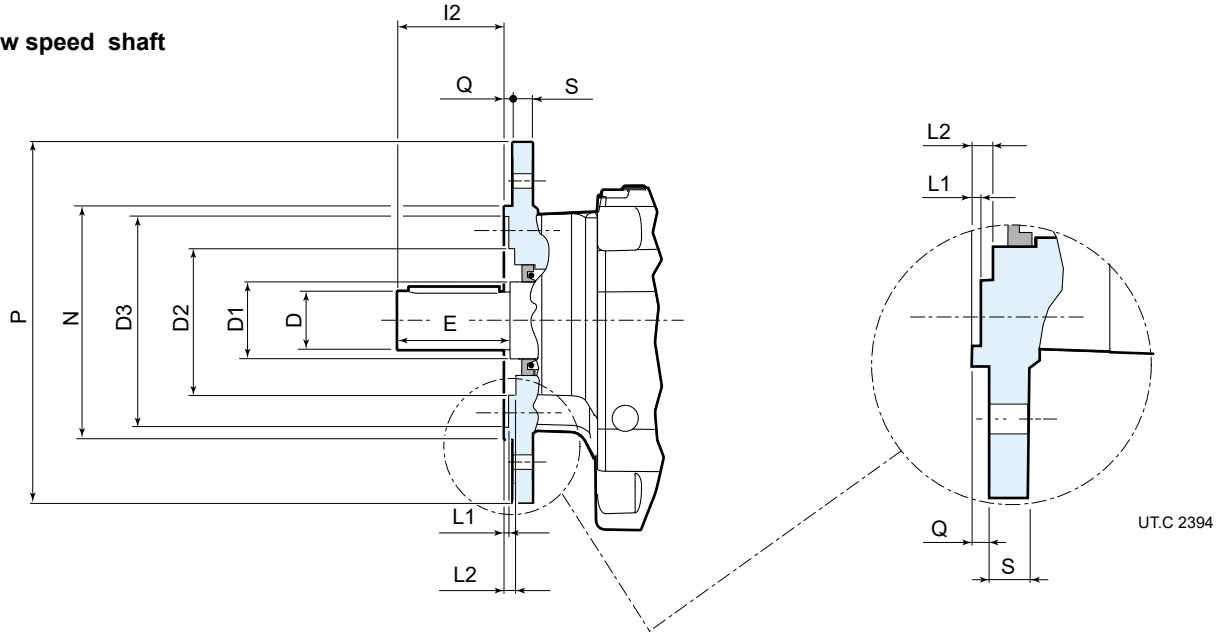

Gear reducer size	B5 flange code	P Ø	N Ø j6	S	D Ø inch	D1 Ø	D2 Ø	D3 Ø	Q	I2	E	L1	L2
iC 27...	F212	120	80	8	1	30	56	66	3	50	50	2	6
	F214	140	95	9	1	30	56	80	3	50	50	2	6
	F216	160	110	10	1	30	56	94	3.5	50	50	2.6	6.5
iC 37...	F312	120	80	8	1	35	63	68	3	50	50	5	7
	F314	140	95	10	1	35	11	83	3	50	50	5	7
	F316	160	110	10	1	35	61	96	3.5	50	50	2	7.5
	F320	200	130	12	1	35	61	118	3.5	50	50	1	7.5
iC 47...	F414	140	95	10	1.25	35	77	82	3	60	60	4	6
	F416	160	110	10	1.25	35	75	96	3.5	60	60	1	6.5
	F420	200	130	12	1.25	35	75	116	3.5	60	60	1	6.5
iC 57...	F516	160	110	10	1.375	40	82	97	3.5	70	70	4	6.5
	F520	200	130	12	1.375	40	78	116	3.5	70	70	-0.5	6.5
	F525	250	180	15	1.375	40	78	160	4	70	70	0	7
iC 67...	F620	200	130	12	1.375	50	96	120	3.5	70	70	3.5	7
	F625	250	180	15	1.375	50	92	162	4	70	70	0.5	7.5
iC 77...	F725	250	180	15	1.625	52	94	160	4	80	80	0.5	7
	F730	300	230	18.5	1.625	52	113	210	4	80	80	0.5	7
iC 87...	F830	300	230	18.5	2.125	62	119	214	4	100	100	0	8
	F835	350	250 h6	18	2.125	62	138	225	5	100	100	0	8
iC 97...	F935	350	250 h6	18	2.375	72	146	234	5	120	120	1	9
	F945	450	350 h6	22	2.375	72	156	320	5	120	120	1	9

Gear reducer size	B5 flange code	P Ø	N Ø j6	S	D Ø inch	D1 Ø	D2 Ø	D3 Ø	Q	I2	E	L1	L2
iP 27 ...	F216	160	110	10	1	30	56	94	3,5	50	50	2,6	6,5
iO 373, iP 37 ...	F316	160	110	10	1	35	61	96	3,5	50	50	2	7,5
iO 473, iP 47 ...	F420	200	130	12	1.25	35	75	116	3,5	60	60	1	6,5
iO 573, iP 57 ...	F525	250	180	15	1.375	40	78	160	4	70	70	0	7
iO 673, iP 67 ...	F625	250	180	15	1.625	50	92	162	4	70	70	0,5	7,5
iO 773, iP 77 ...	F730	300	180	15	2	52	94	160	4	80	80	0,5	7
iO 873, iP 87 ...	F835	350	250	18	2.375	62	138	225	5	100	100	0	8
iO 973, iP 97 ...	F945	450	350	22	2.875	72	156	320	5	120	120	1	9

Hollow low speed shaft

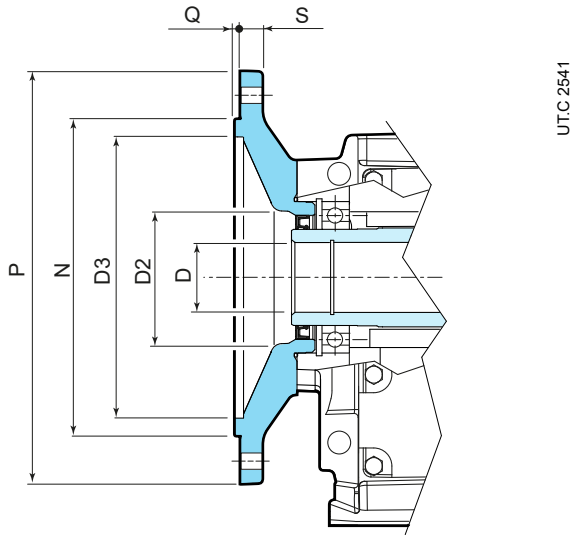

Gear reducer size	B5 flange code	P Ø	N Ø j6	S	D Ø inch	D2 Ø	D3 Ø	Q
iP 27 ...	F216	160	110	10	1	56	94	3,5
iO 373, iP 37 ...	F316	160	110	10	1.250	61	94	3,5
iO 473, iP 47 ...	F420	200	130	12	1.375	75	113	3,5
iO 573, iP 57 ...	F525	250	180	15	1.5	78	155	4
iO 673, iP 67 ...	F625	250	180	15	1.5	78	155	4
iO 773, iP 77 ...	F730	300	230	15	2	94	204	4
iO 873, iP 87 ...	F835	350	250	18	2.375	138	226	5
iO 973, iP 97 ...	F945	450	350	22	2.750	156	324	5

8.5

Details of gearmotor fastening flanges

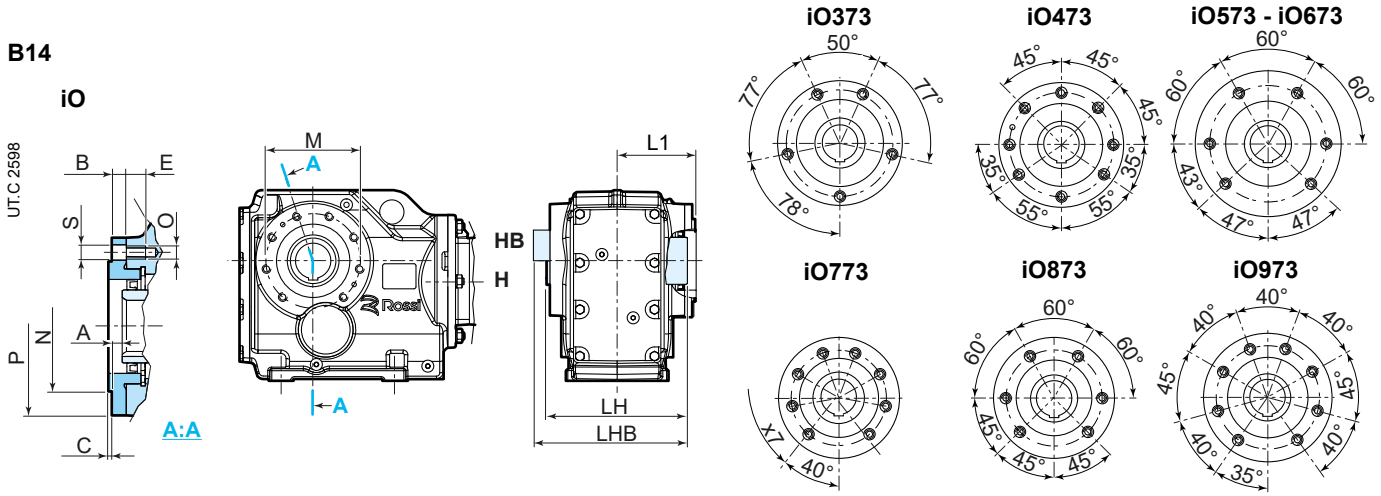

B14 flange can be provided on either side A or side B and is always supplied mounted

Gear reducer size	A	B	C	E	L1	LH	LHB	M Ø	N Ø j6	O	P Ø	S
iO 373	9	11,5	3	11	72	120	150,5	94	80	M8	110	9
iO 473	8	11	3	11	86	150	185	102	80	M8	120	9
iO 573	9	12	3,5	17	95,5	166	200	125	105	M12	155	13,5
iO 673	8,5	12	3,5	17	102	180	216	125	105	M12	155	13,5
iO 773	10	14	3,5	17	118,5	210	251	142	125	M12	170	13,5
iO 873	11	15	4	26	125	240	290	178	155	M16	215	17,5
iO 973	14	18	4	26	168	300	356	220	180	M16	260	17,5

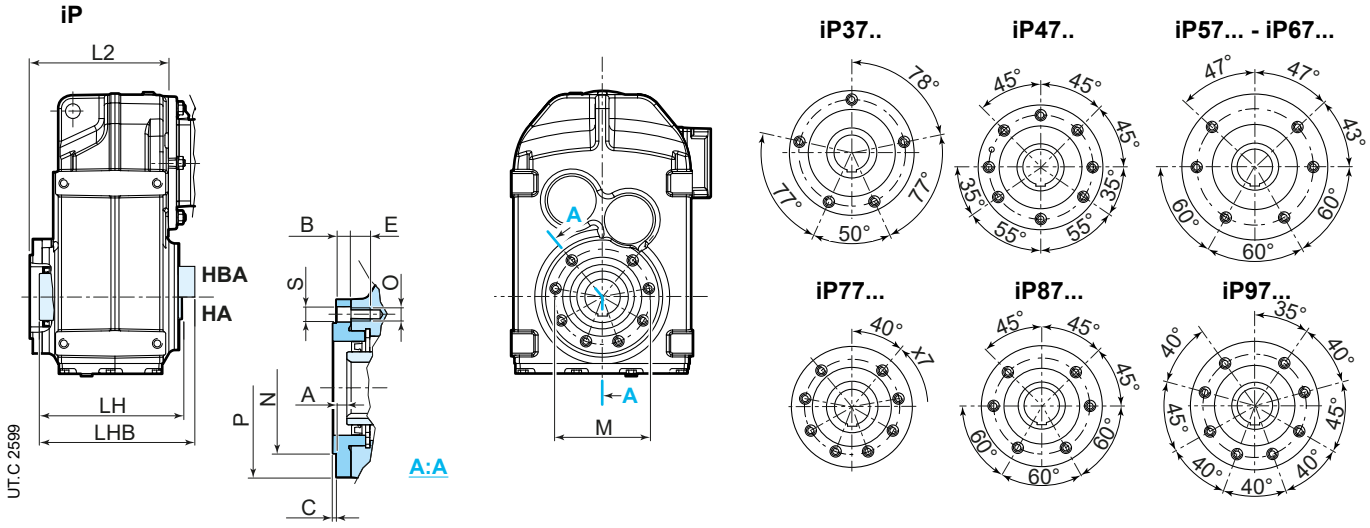

B14 flange is always supplied mounted on opposite motor side (only side suitable for installation)

Gear reducer size	A	B	C	E	L2	LH	LHB	M Ø	N Ø j6	O	P Ø	S Ø
iP 37 ...	9	11,5	3	11	122	122,5	150,5	94	80	M8	110	9
iP 47 ...	8	11	3	11	144	152,5	185	102	80	M8	120	9
iP 57 ...	9	12	3,5	17	162	169	200	125	105	M12	155	13,5
iP 67 ...	8,5	12	3,5	17	173	183	216	125	105	M12	155	13,5
iP 77 ...	10	14	3,5	17	206,5	213	251	142	125	M12	170	13,5
iP 87 ...	11	15	4	26	239	243	290	178	155	M16	215	17,5
iP 97 ...	14	18	4	26	292	303	356	220	180	M16	260	17,5

Shaft height of foot mounted design

h ≤ 250 mm ⟶ tolerance -0.5 ÷ 0 mm

h > 250 mm ⟶ tolerance -1 ÷ 0 mm

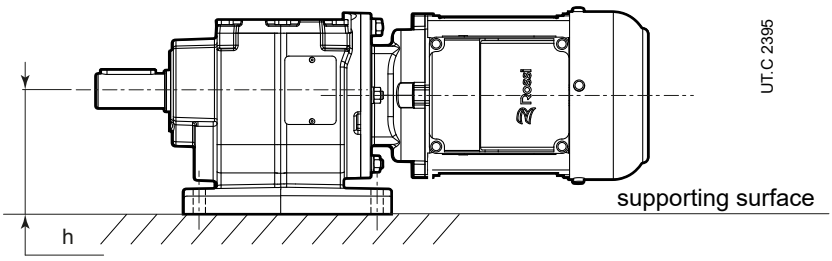

Attention!
Always check that the motor does not protrude from the foot mounting surface.

Low speed shaft end

External diameter: Ø D ≤ 1.500 in ⟶ tolerance +0/-0.0005

Ø D > 1.500 in ⟶ tolerance +0/-0.0010

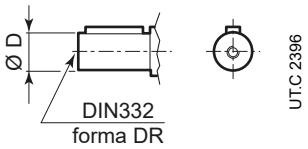

Tapped butt-end hole: Ø D ≤ 1.000 in ⟶ 3/8-16 UNCx14.5

Ø D ≤ 1.375 in ⟶ 1/2-13 UNCx18.5

Ø D ≤ 1.750 in ⟶ 5/8-11 UNCx23

Ø D ≤ 2.875 in ⟶ 3/4-10 UNCx26

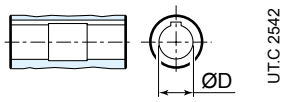

Key: square key to ANSI B17.1 (form B)

Flange

Spigot: Ø N ≤ 230 mm (Ø P 120 ÷ 300 mm) ⟶ tolerance ISO j6

Ø N > 230 mm (Ø P 350 ÷ 450 mm) ⟶ tolerance ISO h6

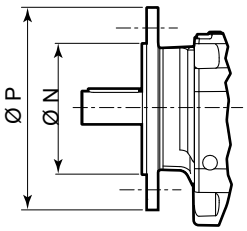

UT.C 2397

8.7

Overall dimensional remarks

8.7.1 Overall dimension details of HB and HBZ motors

The meaning of the total dimensions shown in the drawings in ch.10, 12 and 14 is explained below:

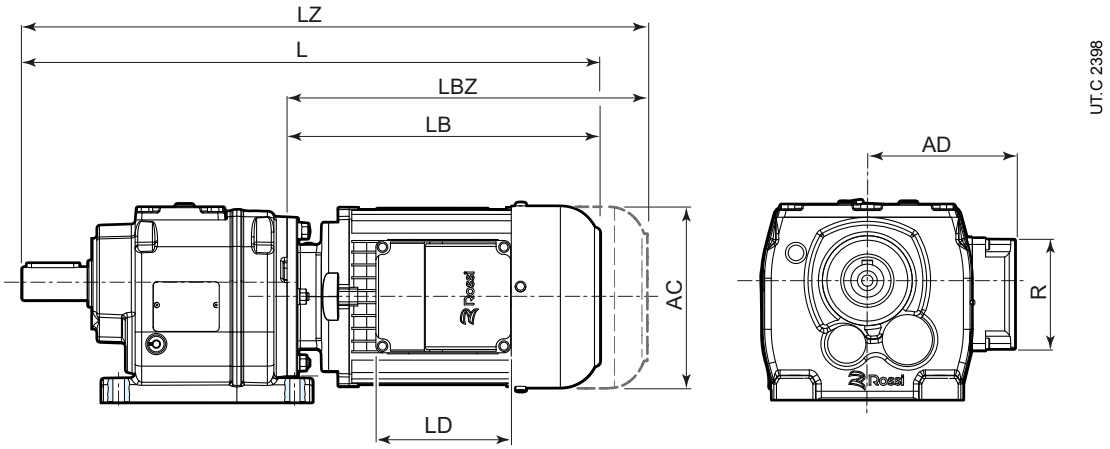

where:

- L — total length of gearmotor
- LZ — total length of gearmotor with brake
- LB — total length of motor
- LBZ — total length of motor with brake
- AC — diameter of motor fan cover
- LD — length of motor terminal box
- AD — radial dimensions of motor terminal box
- R — width of motor terminal box

Motor length and terminal box dimension can slightly change according to specific motor options; if necessary, refer to cat. TX. or contact Rossi North America.

8.7.2 Overall dimension details of accessories

Lifting eyelets and eyebolts:
iC helical inline gearmotors sizes ≤ iC 57… are equipped with lifting eyelets for transport; bigger sizes are equipped with eyebolts.
All **iO** bevel helical and parallel shaft helical gearmotors **iP** are equipped with lifting hole on the housing specifically realized for transport.

Breather plugs:
The dimensional drawings given in Chapters 10, 12 and 14 do not indicate the dimensions of the breather plug because its position depends on the mounting position.
The total overall dimensions can slightly differ from the stated ones.

Shrink disc:
For optimal torque transmission, when using a shrink disk on a hollow shaft, it is necessary to follow the directions below:

- customer's coupling shaft must be solid
- the material of customer's coupling shaft must have an elastic limit Re and/or $Rp_{0.2} \geq 305\ N/mm^2$
- surface roughness ≤ 16 µm

Refer to the dedicated dimensional drawings for dimensions of gearboxes equipped with shrink discs.

Rubber damper:
The rubber damper, provided for versions with PE...H, HB and HD feet requires that upon assembly it is preloaded by compressing by a value ΔL indicated on the dimensional drawings in Chapter 14.

8.7.3 Dimension details of second motor shaft end

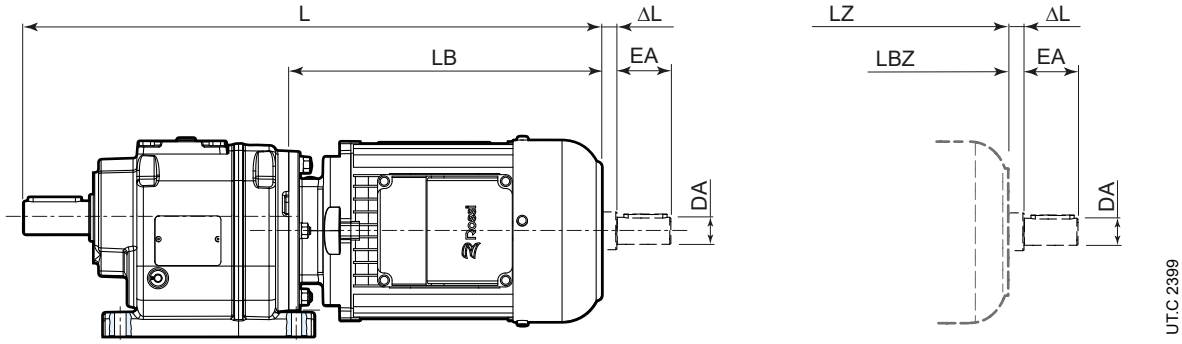

Motor size	Power	Poles	DA Ø	EA	ΔL ≈
63	**A, B**	**2, 4, 6**	11	23	5
71	**A, B**	**2, 4, 6**	11	23	5
80	**A, B**	**2, 4, 6**	14	30	7
90	**S, L, LA**	**2, 4, 6**	14	30	7
100	**LA**	**2, 4, 6**	14	30	8
112	**MA**	**4**	14	30	8
112	**M**	**2, 4, 6**	19	40	9
132	**S, SB**	**2, 4, 6**	19	40	9
132	**M**	**4**	19	40	9
132	**MB**	**4**	28	60	9

8.8

Protection covers

The following gearboxes with Hollow low speed shaft and output shaft with shrink disc are supplied with rotating protection cover.

Gear reducer type	Gear reducer size
iO	373 - 973
iP	27... - 97...

Assembly dimensions of motor and position of terminal box with rotating protection cover
In the case of iP parallel gearboxes, the size of the motor used may be limited due to the size of the protection cover

UT.C 2601

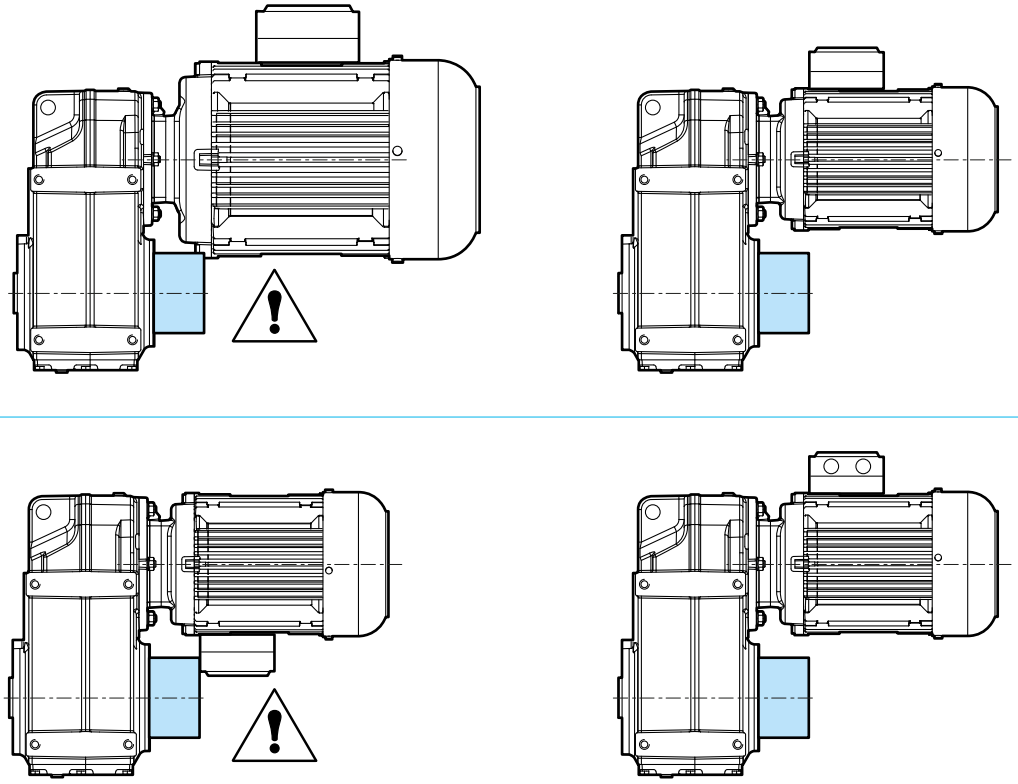

Rossi recommends, in the case of iP gearboxes, to position the terminal box not at 90° (TB1) in the case of large protection covers so as to facilitate assembly and maintenance.

The following table shows the maximum Rossi motor that can be mounted, depending on the size of the gearbox, to avoid difficulties relative to the presence of the protection cover.

iP size	27	37	47	57	67	77	87	97
Max installable compact motor size	71	71	80	90	112	132	all	all

In the case of mounting the iP gearbox with an adapter, the rotary protection can always be supplied except for iP 27 - motors 63 and 71, iP 37 - motor 71 combinations

8.9 Fastening bolts

Unless otherwise stated, usually it is sufficient to use bolts in class 8.8; The following cases are an exception, for which bolts with strength class 10.9 must be used:

- iC 372 - iC 373 F... with flange F312 and F314
- iC 472 - iC 473 F... with flange F414
- iC 572 - iC 573 F... with flange F516

Thoroughly degrease the bolts before tightening. It is recommended to apply locking adhesives on the fastening bolts and on flange mating surfaces, in the event of heavy vibrations, heavy duties and/or frequent drive inversions.
Tighten the bolts to the tightening torque stated in the table.

Fastening bolts	**Tightening torque *Ms* for bolts for foot and flange fastening** lb in	
	cl. 8.8	cl. 10.9
M4	26	35
M5	53	75
M6	97	135
M8	220	310
M10	445	620
M12	750	1060
M14	1190	1680
M16	1810	2570
M18	2480	3540
M20	3540	4960
M22	4870	6820
M24	6280	8850

9

Helical inline Selection tables - iC

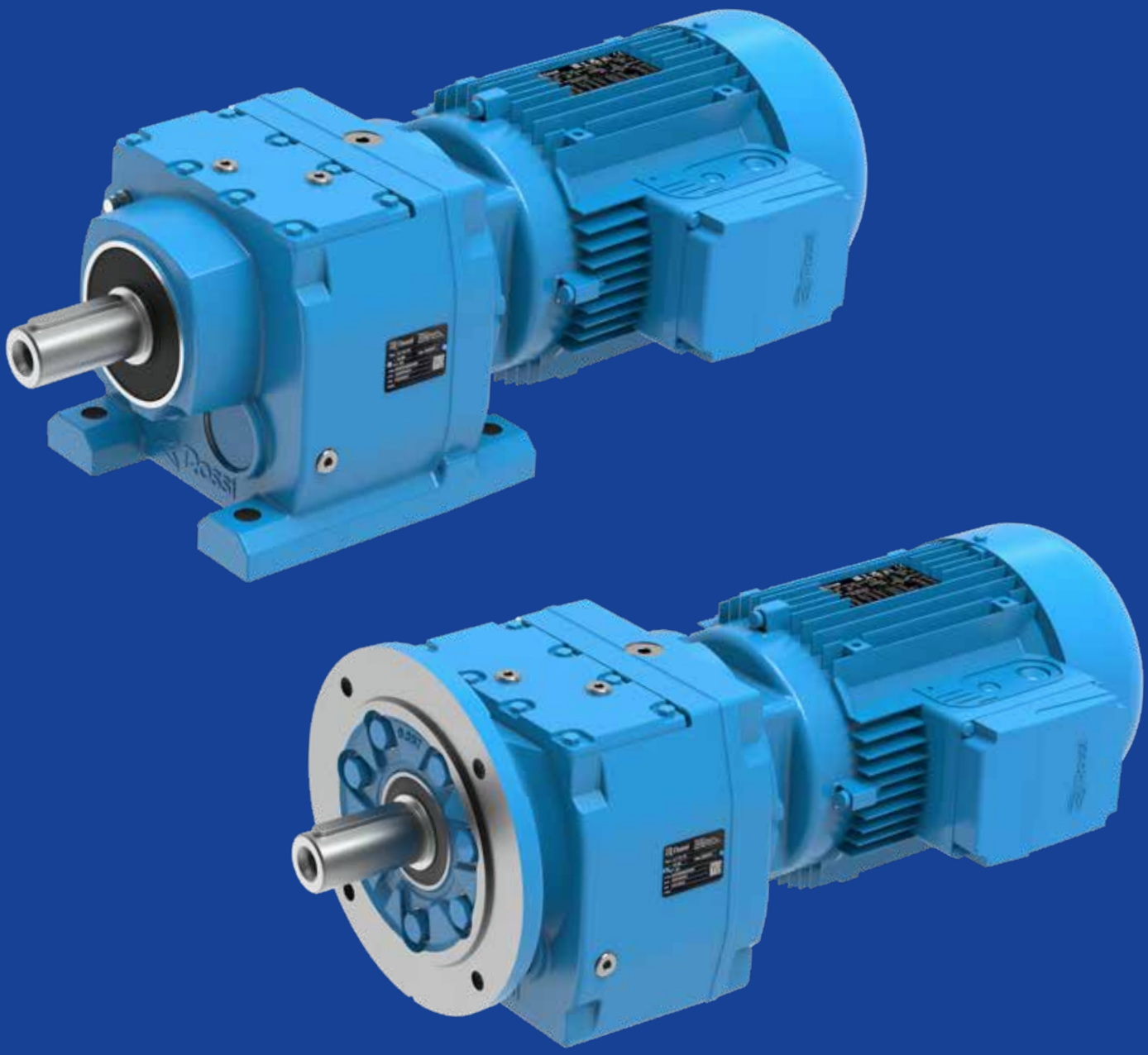

Section contents

9.1	Possible geometrical combinations	96
9.1.1	General	96
9.1.2	Key	96
9.2	Geometrical coupling tables	97
9.3	Selection tables [hp]	106

9.1

Possible geometrical combinations

9.1.1 General

The tables in the following pages show the geometrical coupling possibilities with HB 4 poles motors, according to train of gears (2 or 3 stages) and transmission ratio.
Also the low speed shaft rotation speed n_2 calculated according to a nominal input speed equal to n_1 = 1700 rpm, are shown.
The values of the nominal torque at the low speed shaft T_{N2} and of the permissible radial load F_{r2} acting on the center line are also referred to this speed.

At the time of selection, it is necessary to evaluate the actual operating conditions in relation to the actual power of the applied motor as indicated in ch. 6.

9.1.2 Key

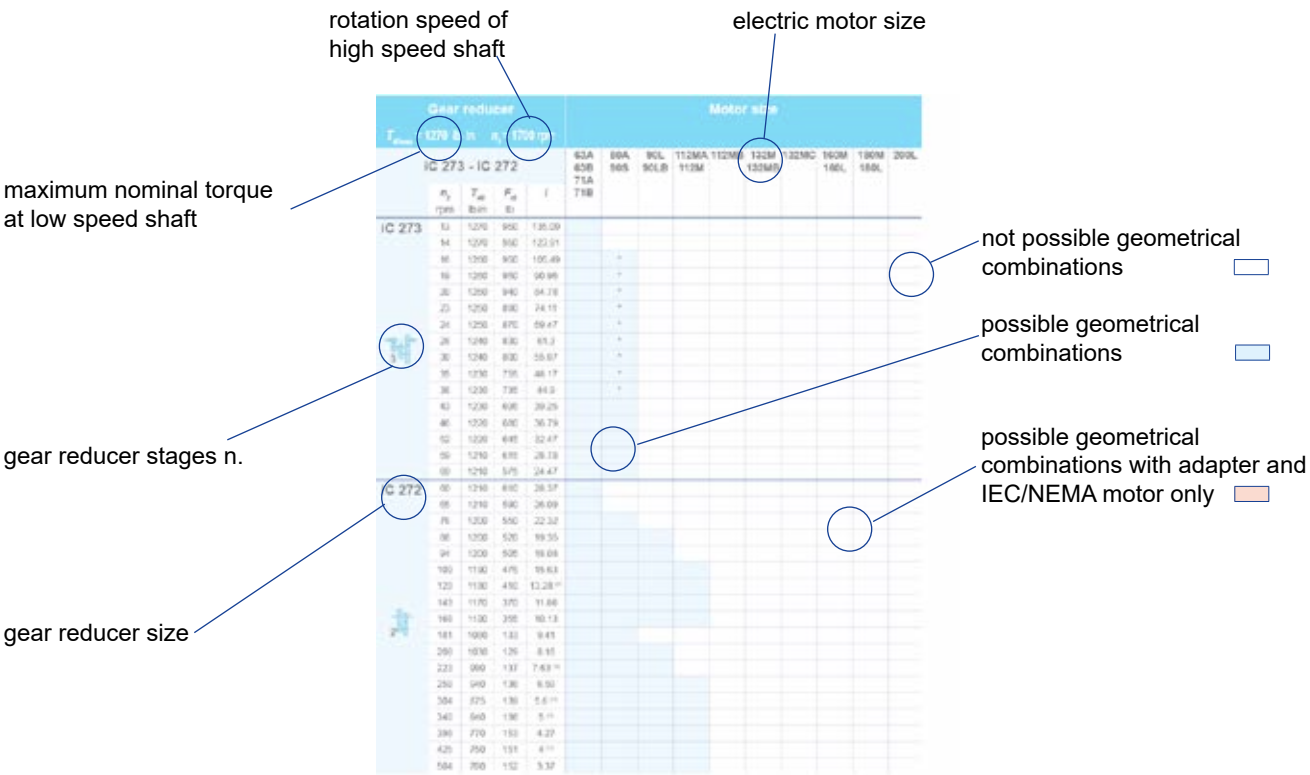

where

- n_2 low speed shaft rotation speed
- T_{N2} nominal torque at low speed shaft
- F_{r2} permissible radial load acting on center line of low speed shaft (at speed n_2 and with torque T_{N2} indicated in the table - valid only for foot mounted gearmotor design)
- i transmission ratio

Gear reducer T_{N2max} = 1270 lb in n_1 = 1700 rpm					Motor size									
iC 273 - iC 272	n_2 rpm	T_{N2} lb in	F_{r2} lb	i	63A 63B 71A 71B	80A 90S	90L 90LB	112MA 112M	112MB	132M 132MB	132MC	160M 160L	180M 180L	200L
iC 273	13	1270	950	135.09										
	14	1270	950	123.91										
	16	1260	950	105.49		*								
	19	1260	950	90.96		*								
	20	1260	940	84.78		*								
	23	1250	890	74.11		*								
	24	1250	870	69.47		*								
	28	1240	830	61.3		*								
3	30	1240	800	55.87		*								
	35	1230	755	48.17		*								
	38	1230	735	44.9		*								
	43	1230	695	39.25										
	46	1220	680	36.79										
	52	1220	645	32.47										
	59	1210	615	28.78										
	69	1210	575	24.47										
iC 272	60	1210	610	28.37										
	65	1210	590	26.09										
	76	1200	550	22.32										
	88	1200	520	19.35										
	94	1200	505	18.08										
	109	1190	475	15.63										
	128	1180	410	13.28 (1)										
	143	1170	370	11.86										
	168	1100	355	10.13										
2	181	1080	133	9.41										
	208	1030	129	8.16										
	223	990	137	7.63 (1)										
	258	940	136	6.59										
	304	875	139	5.6 (1)										
	340	840	136	5 (1)										
	398	770	153	4.27										
	425	750	151	4 (1)										
	504	700	152	3.37										

* availanle only for motor size 80A 4

(1) Finite transmission ratio *i*

Gear reducer T_{N2max} = 1890 lb in n_1 = 1700 rpm					Motor size									
iC 373 - iC 372	n_2 rpm	T_{N2} lb in	F_{r2} lb	i	63A 63B 71A 71B	80A 90S	90L 90LB	112MA 112M	112MB	132M 132MB	132MC	160M 160L	180M 180L	200L
iC 373	13	1890	1110	134.82										
	14	1880	1110	123.66										
	16	1870	1110	105.28										
	19	1870	1110	90.77										
	20	1860	1110	84.61										
	23	1850	1110	73.96										
	25	1850	1110	69.33										
	28	1840	1110	61.18										
3	30	1840	1110	55.76										
	35	1830	1080	48.08										
	38	1820	1020	44.81										
	43	1820	920	39.17										
	46	1810	880	36.72										
	52	1810	790	32.4										
	59	1800	705	28.73										
	70	1770	605	24.42										
iC 372	60	1800	700	28.32										
	65	1790	740	26.03										
	76	1780	545	22.27										
	88	1780	460	19.31										
	94	1770	425	18.05										
	109	1770	345	15.6										
	128	1680	320	13.25										
	144	1620	310	11.83										
2	168	1500	315	10.11										
	180	1480	305	9.47										
	213	1380	300	7.97										
	255	1290	144	6.67										
	300	1260	94	5.67										
	336	1210	104	5.06										
	394	1120	114	4.32										
	420	1080	121	4.05										
	499	1000	138	3.41										

Gear reducer T_{N2max} = 2960 lb in n_1 = 1700 rpm					Motor size									
iC 473 - iC 472	n_2 rpm	T_{N2} lb in	F_{r2} lb	i	63A 63B 71A 71B	80A 90S	90L 90LB	112MA 112M	112MB	132M 132MB	132MC	160M 160L	180M 180L	200L
iC 473	9.6	2960	1220	176.88										
	10	2960	1220	162.94										
	12	2960	1220	139.99										
	14	2960	1220	121.87										
	15	2960	1220	114.17										
	17	2960	1220	100.86										
	18	2960	1220	93.68										
	20	2960	1220	84.9										
	22	2960	1220	76.23										
	25	2960	1220	68.54										
3	26	2960	1200	64.21										
	30	2960	1150	56.73										
	32	2960	1110	52.69										
	36	2960	1070	47.75										
	40	2960	1020	42.87										
	46	2960	960	36.93										
	49	2960	940	34.73										
	57	2960	880	29.88										
	64	2960	840	26.7										
	72	2960	775	23.59										
iC 472	50	2410	970	33.79										
	55	2150	960	31.12										
	64	2960	840	26.74										
	73	2830	760	23.28										
	78	2760	710	21.81										
	88	2640	640	19.27										
	95	2570	625	17.89										
	105	2470	615	16.22										
	117	2370	605	14.56										
	136	2240	590	12.54										
2	144	2180	575	11.79										
	167	2050	565	10.15										
	187	1950	555	9.07										
	212	1850	545	8.01										
	219	1640	550	7.76 (1)										
	244	1590	540	6.96										
	283	1550	510	6										
	301	1550	500	5.64 (1)										
	351	1460	470	4.85										
	392	1380	455	4.34										
	444	1310	430	3.83										

(1) Finite transmission ratio *i*

Gear reducer T_{N2max} = 4430 lb in n_1 = 1700 rpm					Motor size									
iC 573 - iC 572	n_2 rpm	T_{N2} lb in	F_{r2} lb	i	63A 63B 71A 71B	80A 90S	90L 90LB	112MA 112M	112MB	132M 132MB	132MC	160M 160L	180M 180L	200L
iC 573	9.1	4430	1600	186.89										
	9.9	4420	1600	172.17										
	11	4340	1600	147.92										
	13	4330	1600	128.77										
	14	4320	1600	120.63										
	16	4300	1600	106.58										
	17	4290	1600	98.99										
	19	4280	1600	89.71										
	21	4260	1580	80.55										
	25	4240	1490	69.23										
3	26	4230	1450	64.85										
	30	4220	1370	57.29										
	32	4210	1330	53.22										
	35	4190	1280	48.23										
	39	4180	1220	43.3										
	46	4160	1140	37.3 (1)										
	48	4150	1110	35.07										
	56	4130	1040	30.18										
	63	4110	990	26.97										
iC 572	65	4110	980	26.31										
	68	4110	950	24.99 (1)										
	78	4090	900	21.93										
	91	4070	830	18.6 (1)										
	101	4060	845	16.79										
	115	4040	695	14.77 (1)										
	122	4030	670	13.95 (1)										
	143	3980	645	11.88										
2	158	3870	635	10.79										
	182	3650	615	9.35										
	188	3320	305	9.06										
	213	3140	315	7.97										
	226	3100	300	7.53										
	265	2960	270	6.41										
	292	2830	285	5.82										
	337	2700	270	5.05										
	387	2500	315	4.39										

(1) Finite transmission ratio *i*

Gear reducer T_{N2max} = 5930 lb in n_1 = 1700 rpm					Motor size									
iC 673 - iC 672					63A 63B 71A 71B	80A 90S	90L 90LB	112MA 112M	112MB	132M 132MB	132MC	160M 160L	180M 180L	200L
	n_2 rpm	T_{N2} lb in	F_{r2} lb	i										
iC 673	8.5	5930	1700	199.81										
	9.2	5930	1700	184.07										
	11	5930	1700	158.14										
	12	5930	1700	137.67										
	13	5930	1700	128.97										
	15	5930	1700	113.94										
	16	5930	1700	105.83										
	18	5930	1700	95.91										
	20	5930	1700	86.11										
	23	5930	1700	74.17										
3	24	5850	1700	69.75										
	28	5770	1700	61.26										
	30	5620	1700	56.89										
	33	5440	1700	51.56										
	37	5310	1700	46.29										
	43	5130	1750	39.88 (1)										
	45	5040	1780	37.5										
	53	4830	1850	32.27										
	59	4650	1890	28.83										
iC 672	60	4960	1850	28.13										
	64	4820	1850	26.72										
	73	5580	1760	23.44										
	85	5390	1470	19.89										
	95	5270	1380	17.95										
	108	4960	1350	15.79										
	114	4870	1320	14.91										
	134	4600	1260	12.7										
	147	4430	1230	11.54										
	170	4160	1200	10										
	195	3890	1190	8.7 (1)										
2	218	3360	1110	7.79										
	231	3270	1100	7.36 (1)										
	271	2920	1150	6.27										
	298	2740	1130	5.7										
	345	2570	1080	4.93										
	396	2390	1040	4.29										

(1) Finite transmission ratio *i*

Gear reducer T_{N2max} = 8070 lb in n_1 = 1700 rpm					Motor size									
iC 773 - iC 772	n_2 rpm	T_{N2} lb in	F_{r2} lb	i	63A 63B 71A 71B	80A 90S	90L 90LB	112MA 112M	112MB	132M 132MB	132MC	160M 160L	180M 180L	200L
iC 773	8.7	8190	2230	195.24 (1)										
	10	8190	2230	166.59										
	12	8090	2230	145.67										
	12	8080	2230	138.39										
	14	8040	2230	121.42										
	17	8000	2230	102.99										
	18	7980	2230	92.97										
	21	7950	2230	81.8										
	22	7930	2230	77.24										
	26	7890	2230	65.77										
3	29	7860	2230	57.68										
	33	7830	2230	52.07										
	37	7670	2230	45.81										
	39	7520	2230	43.26										
	46	7330	2230	36.83										
	51	7260	2230	33.47										
	59	7260	2030	29										
	67	6900	1950	25.23										
iC 772	73	7260	1690	23.37										
	79	7400	1560	21.43										
	90	7040	1510	18.8										
	95	6900	1430	17.82 (1)										
	109	6550	1390	15.6										
	121	6370	1330	14.05										
	138	6170	1270	12.33										
2	156	5900	1220	10.88										
	176	5580	1190	9.64										
	198	5580	705	8.59										
	220	5450	675	7.74										
	250	5180	660	6.79										
	284	4830	700	5.99 (1)										
	320	4510	710	5.31										

(1) Finite transmission ratio *i*

Gear reducer T_{N2max} = 15500 lb in n_1 = 1700 rpm					Motor size									
iC 873 - iC 872	n_2 rpm	T_{N2} lb in	F_{r2} lb	i	63A 63B 71A 71B	80A 90S	90L 90LB	112MA 112M	112MB	132M 132MB	132MC	160M 160L	180M 180L	200L
iC 873	6.9	15500	3800	246.54										
	7.9	15500	3800	216.54										
	8.3	15500	3800	205.71										
	9.4	15500	3800	181.77										
	11	15500	3800	155.34										
	12	15500	3800	142.41										
	14	15500	3800	124.97										
	14	15500	3800	118.43 (1)										
	16	15400	3800	103.65										
	18	15300	3800	93.38										
3	21	15300	3730	81.92										
	23	15200	3380	72.57										
	27	15200	3020	63.68 (1)										
	28	15100	2880	60.35 (1)										
	32	15100	2540	52.82										
	36	15000	2280	47.58										
	41	15000	1970	41.74										
	46	14800	1680	36.84 (1)										
	52	14200	1420	32.66 (1)										
	61	13400	1250	27.88										
iC 872	49	14600	1690	34.4 (1)										
	54	14200	1330	31.4										
	61	13700	1080	27.84 (1)										
	73	13700	740	23.4										
	79	13400	740	21.51										
	89	12900	720	19.1										
	100	12300	685	17.08 (1)										
	111	11900	665	15.35										
2	128	11300	630	13.33										
	142	10900	615	11.93										
	172	10400	500	9.9 (1)										
	186	10700	–	9.14 (1)										
	207	10300	–	8.22										
	238	9470	–	7.13										
	266	9120	–	6.39										
	321	8130	149	5.31										

(1) Finite transmission ratio *i*

Gear reducer M_{N2max} = 26600 lb in n_1 = 1700 rpm					Motor size									
iC 973 - iC 972	n_2 rpm	T_{N2} lb in	F_{r2} lb	i	63A 63B 71A 71B	80A 90S	90L 90LB	112MA 112M	112MB	132M 132MB	132MC	160M 160L	180M 180L	200L
iC 973	5.9	29600	4450	289.74										
	6.6	29600	4450	255.71										
	7.0	29600	4450	241.25										
	7.9	29600	4450	216.28										
	9.1	29600	4450	186.3										
	10.0	29500	4450	170.02										
	11	29000	4450	150.78										
	13	28800	4450	126.75										
	15	28700	4450	116.48										
	16	28600	4450	103.44										
3	18	28500	4270	92.48										
	20	28400	3840	83.15										
	24	28300	3300	72.17										
	26	28200	2930	65.21										
	28	28100	2620	59.92										
	32	28000	2210	53.21										
	36	27400	1840	47.58										
	40	26600	1500	42.78										
	46	26600	1060	37.13										
	51	25800	1030	33.25										
	62	23600	1090	27.58										
iC 972	53	25700	1800	32.05										
	63	24500	1340	27.19										
	68	25000	400	25.03										
	76	24100	400	22.37										
	84	23300	430	20.14										
	93	22100	485	18.24										
	105	21200	470	16.17										
	116	20400	510	14.62										
2	137	19400	445	12.39										
	157	18500	435	10.83										
	183	18000	–	9.29										
	203	18000	–	8.39										
	239	17700	–	7.12										
	274	16700	–	6.21										
	327	15800	–	5.2										
	378	14400	–	4.5 (1)										

(1) Finite transmission ratio *i*

page intentionally left blank

9.3

Selection tables [hp]

P_1 = 0.16 hp

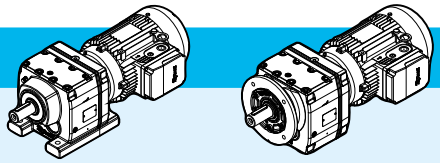

n_2 rpm	T_2 lb in	i	F_{r2} lb	SF			lb foot HB	lb foot HBZ	lb flange HB	lb flange HBZ	p.
5.7	1760	195.24 (1)	2920	4.7	**iC 773 – HB2 63 B 6 B20B**	3	100	105	115	120	154
6.7	1500	166.59	2920	5.5							
7.7	1310	145.67	2920	6.2							
5.6	1800	199.81	2300	3.3	**iC 673 – HB2 63 B 6 B16B**	3	80	84	86	90	152
6.1	1660	184.07	2310	3.6							
7.1	1420	158.14	2330	4.2							
8.1	1240	137.67	2340	4.8							
8.7	1160	128.97	2340	5.1							
9.8	1030	113.94	2350	5.8							
8.5	1190	199.81	2340	5	**iC 673 – HB2 63 A 4 B16B**	3	78	82	85	89	
9.2	1100	184.07	2340	5.4							
6	1680	186.89	1770	2.6	**iC 573 – HB2 63 B 6 B16B**	3	61	65	68	72	150
6.5	1550	172.17	1770	2.9							
7.6	1330	147.92	1780	3.3							
8.7	1160	128.77	1790	3.8							
9.3	1090	120.63	1790	4.1							
11	960	106.58	1790	4.6							
11	890	98.99	1790	4.9							
9	1120	186.89	1790	4	**iC 573 – HB2 63 A 4 B16B**	3	59	63	67	70	
9.8	1030	172.17	1790	4.3							
11	885	147.92	1790	4.9							
13	770	128.77	1800	5.6							
6.3	1590	176.88	1330	1.85	**iC 473 – HB2 63 B 6 B16B**	3	47	51	49	53	148
6.9	1470	162.94	1340	2							
8	1260	139.99	1350	2.4							
9.2	1100	121.87	1360	2.7							
9.6	1060	176.88	1360	2.8	**iC 473 – HB2 63 A 4 B16B**	3	45	49	48	52	
10	970	162.94	1370	3							
12	835	139.99	1370	3.5							
14	725	121.87	1380	4.1							
15	680	114.17	1380	4.4							
17	600	100.86	1380	4.9							
18	560	93.68	1380	5.3							
8.3	1210	134.82	1250	1.65	**iC 373 – HB2 63 B 6 B12B**	3	33	36	37	41	146
9.1	1110	123.66	1270	1.75							
11	950	105.28	1300	2							
12	815	90.77	1310	2.3							
13	760	84.61	1320	2.5							
15	665	73.96	1330	2.8							

(1) Finite transmission ratio *i*

P_1 = 0.16 hp

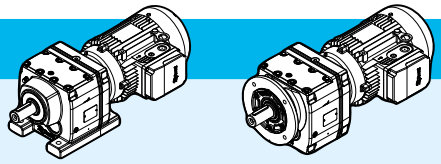

n_2 rpm	T_2 lb in	i	F_{r2} lb	SF			lb foot HB	lb foot HBZ	lb flange HB	lb flange HBZ	p.
13	805	134.82	1320	2.3	**iC 373 – HB2 63 A 4 B12B**	3	31	35	36	40	146
14	740	123.66	1320	2.6							
16	630	105.28	1340	3							
19	540	90.77	1340	3.4							
20	505	84.61	1350	3.7							
23	440	73.96	1350	4.2							
11	950	105.49	900	1.35	**iC 273 – HB2 63 B 6 B12B**	3	30	34	31	35	144
12	820	90.96	920	1.55							
13	765	84.78	920	1.65							
15	665	74.11	940	1.9							
13	805	135.09	920	1.6	**iC 273 – HB2 63 A 4 B12B**	3	29	33	30	33	
14	740	123.91	930	1.7							
16	630	105.49	940	2							
19	545	90.96	950	2.3							
20	505	84.78	960	2.5							
23	440	74.11	960	2.8							
24	415	69.47	970	3							
28	365	61.3	930	3.4							
30	335	55.87	910	3.7							
35	285	48.17	870	4.3							
38	270	44.9	850	4.6							

P_1 = 0.25 hp

5.7	2750	195.24 (1)	2860	3	**iC 773 – HB2 71 A 6 B20B**	3	99	105	115	120	154
6.7	2340	166.59	2890	3.5							
7.7	2050	145.67	2910	4							
8.1	1950	138.39	2910	4.2							
9.2	1710	121.42	2920	4.8							
8.6	1830	195.24 (1)	2920	4.5	**iC 773 – HB2 63 B 4 B20B**	3	100	105	115	120	
10	1560	166.59	2920	5.2							
12	1370	145.67	2920	5.9							
12	1300	138.39	2920	6.2							
5.6	2810	199.81	2190	2.1	**iC 673 – HB2 71 A 6 B16B**	3	83	89	89	95	152
6.1	2590	184.07	2210	2.3							
7.1	2220	158.14	2260	2.7							
8.1	1940	137.67	2280	3.1							
8.7	1810	128.97	2290	3.3							
9.8	1600	113.94	2310	3.7							
11	1490	105.83	2320	4							
12	1350	95.91	2330	4.4							
13	1210	86.11	2340	4.9							
15	1040	74.17	2340	5.7							
16	980	69.75	2350	6							

(1) Finite transmission ratio *i*

P_1 = 0.25 hp

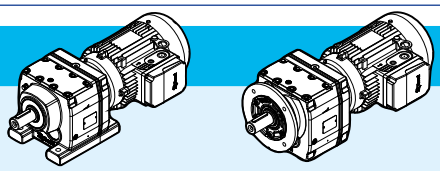

n_2 rpm	T_2 lb in	i	F_{r2} lb	SF			lb foot HB	lb foot HBZ	lb flange HB	lb flange HBZ	p.
8.4	1870	199.81	2300	3.2	**iC 673 – HB2 63 B 4 B16B**	3	80	84	86	90	152
9.1	1730	184.07	2310	3.4							
11	1480	158.14	2330	4							
12	1290	137.67	2340	4.6							
13	1210	128.97	2340	4.9							
15	1070	113.94	2350	5.5							
16	995	105.83	2350	6							
6	2630	186.89	1710	1.7	**iC 573 – HB2 71 A 6 B16B**	3	64	70	71	77	150
6.5	2420	172.17	1720	1.85							
7.6	2080	147.92	1740	2.1							
8.7	1810	128.77	1760	2.4							
9.3	1700	120.63	1760	2.6							
9	1750	186.89	1770	2.5	**iC 573 – HB2 63 B 4 B16B**	3	61	65	68	72	
9.8	1610	172.17	1770	2.7							
11	1390	147.92	1780	3.1							
13	1210	128.77	1790	3.6							
14	1130	120.63	1790	3.8							
16	1000	106.58	1790	4.3							
17	930	98.99	1790	4.6							
19	840	89.71	1790	5.1							
9.5	1660	176.88	1330	1.8	**iC 473 – HB2 63 B 4 B16B**	3	47	51	49	53	148
10	1530	162.94	1340	1.95							
12	1310	139.99	1350	2.3							
14	1140	121.87	1360	2.6							
15	1070	114.17	1360	2.8							
17	945	100.86	1370	3.1							
18	880	93.68	1370	3.4							
20	795	84.9	1370	3.7							
22	715	76.23	1380	4.1							
11	1480	105.28	1110	1.3	**iC 373 – HB2 71 A 6 B12B**	3	36	42	40	46	146
12	1280	90.77	1230	1.5							
13	1190	84.61	1250	1.6							
12	1260	134.82	1250	1.5	**iC 373 – HB2 63 B 4 B12B**	3	33	36	37	41	
14	1160	123.66	1270	1.6							
16	985	105.28	1290	1.9							
19	850	90.77	1310	2.2							
20	795	84.61	1320	2.3							
23	695	73.96	1330	2.7							
24	650	69.33	1340	2.8							
27	575	61.18	1330	3.2							
30	525	55.76	1300	3.5							
35	450	48.08	1240	4.1							

P_1 = 0.25 hp

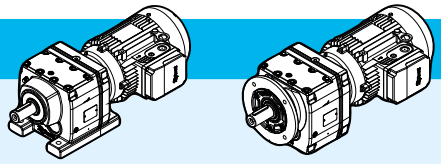

n_2 rpm	T_2 lb in	i	F_{r2} lb	SF			lb foot HB	lb foot HBZ	lb flange HB	lb flange HBZ	p.
14	1160	123.91	795	1.1	**iC 273 – HB2 63 B 4 B12B**	3	30	34	31	35	144
16	990	105.49	900	1.3							
18	855	90.96	920	1.5							
20	795	84.78	920	1.6							
23	695	74.11	930	1.8							
24	650	69.47	930	1.9							
27	575	61.3	900	2.2							
30	525	55.87	880	2.4							
35	450	48.17	840	2.7							
37	420	44.9	830	2.9							
43	370	39.25	795	3.3							
46	345	36.79	780	3.5							
52	305	32.47	750	4							
58	270	28.78	725	4.5							
69	230	24.47	690	5.3							
59	265	28.37	720	4.6	**iC 272 – HB2 63 B 4 B12B**	2	30	34	31	35	
64	245	26.09	700	4.9							
75	210	22.32	670	5.8							
87	181	19.35	640	6.6							
93	170	18.08	625	7.1							
107	147	15.63	600	8.1							
127	125	13.28 (1)	570	9.5							

P_1 = 0.33 hp

5.7	3630	195.24 (1)	2790	2.3	**iC 773 – HB2 71 B 6 B20B**	3	100	105	115	120	154
6.7	3090	166.59	2840	2.6							
7.7	2710	145.67	2870	3							
8.8	2360	195.24 (1)	2890	3.5	**iC 773 – HB2 71 A 4 B20B**	3	98	105	115	120	
10	2010	166.59	2910	4.1							
12	1760	145.67	2920	4.6							
12	1670	138.39	2920	4.8							
14	1470	121.42	2920	5.5							
5.6	3710	199.81	2060	1.6	**iC 673 – HB2 71 B 6 B16B**	3	85	91	91	97	152
6.1	3420	184.07	2110	1.75							
7.1	2940	158.14	2180	2							
8.1	2560	137.67	2230	2.3							
8.7	2390	128.97	2240	2.5							
9.8	2120	113.94	2270	2.8							
11	1970	105.83	2290	3							
8.6	2420	199.81	2240	2.5	**iC 673 – HB2 71 A 4 B16B**	3	82	88	88	94	
9.3	2230	184.07	2260	2.7							
11	1910	158.14	2290	3.1							

(1) Finite transmission ratio *i*

P_1 = 0.33 hp

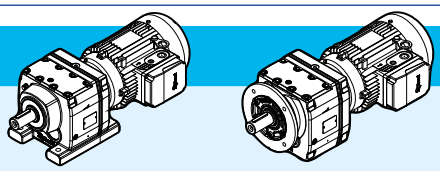

n_2 rpm	T_2 lb in	i	F_{r2} lb	SF			lb foot HB	lb foot HBZ	lb flange HB	lb flange HBZ	p.
12	1660	137.67	2310	3.6	iC 673 – HB2 71 A 4 B16B	3	82	88	88	94	152
13	1560	128.97	2320	3.8							
15	1380	113.94	2330	4.3							
16	1280	105.83	2330	4.6							
18	1160	95.91	2340	5.1							
20	1040	86.11	2350	5.7							
6	3470	186.89	1640	1.3	iC 573 – HB2 71 B 6 B16B	3	66	72	73	79	150
6.5	3200	172.17	1670	1.4							
7.6	2750	147.92	1700	1.6							
8.7	2390	128.77	1730	1.85							
9.3	2240	120.63	1740	2							
11	1980	106.58	1750	2.2							
11	1840	98.99	1760	2.4							
9.2	2260	186.89	1740	1.95	iC 573 – HB2 71 A 4 B16B	3	63	69	70	76	
10	2080	172.17	1750	2.1							
12	1790	147.92	1760	2.4							
13	1560	128.77	1770	2.8							
14	1460	120.63	1780	3							
16	1290	106.58	1780	3.3							
17	1200	98.99	1790	3.6							
19	1080	89.71	1790	3.9							
21	975	80.55	1790	4.4							
25	835	69.23	1770	5.1							
9.7	2140	176.88	1280	1.4	iC 473 – HB2 71 A 4 B16B	3	49	55	51	57	148
11	1970	162.94	1290	1.5							
12	1690	139.99	1320	1.75							
14	1470	121.87	1340	2							
15	1380	114.17	1340	2.1							
17	1220	100.86	1350	2.4							
18	1130	93.68	1360	2.6							
20	1030	84.9	1360	2.9							
23	920	76.23	1370	3.2							
25	830	68.54	1370	3.6							
27	775	64.21	1370	3.8							
30	685	56.73	1330	4.3							
33	635	52.69	1300	4.7							
36	575	47.75	1260	5.1							
13	1630	134.82	1040	1.15	iC 373 – HB2 71 A 4 B12B	3	35	41	39	45	146
14	1500	123.66	1140	1.25							
16	1270	105.28	1240	1.45							
19	1100	90.77	1270	1.7							
20	1020	84.61	1280	1.8							
23	895	73.96	1300	2.1							
25	840	69.33	1310	2.2							

P_1 = 0.33 hp

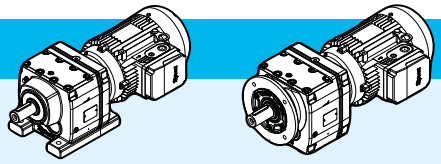

n_2 rpm	T_2 lb in	i	F_{r2} lb	SF			lb foot HB	lb foot HBZ	lb flange HB	lb flange HBZ	p.
28	740	61.18	1310	2.5	**iC 373 – HB2 71 A 4 B12B**	3	35	41	39	45	146
31	675	55.76	1280	2.7							
36	580	48.08	1220	3.1							
38	540	44.81	1200	3.4							
44	475	39.17	1150	3.8							
47	445	36.72	1130	4.1							
53	390	32.4	1090	4.6							
20	1030	84.78	870	1.25	**iC 273 – HB2 71 A 4 B12B**	3	32	38	33	39	144
23	895	74.11	910	1.4							
25	840	69.47	910	1.5							
28	740	61.3	880	1.7							
31	675	55.87	860	1.85							
36	585	48.17	820	2.1							
38	545	44.9	810	2.3							
44	475	39.25	780	2.6							
47	445	36.79	765	2.7							
53	395	32.47	740	3.1							
60	350	28.78	715	3.5							
70	295	24.47	680	4.1							
61	345	28.37	710	3.5	**iC 272 – HB2 71 A 4 B12B**	2	32	38	33	39	
66	315	26.09	695	3.8							
77	270	22.32	660	4.5							
89	235	19.35	635	5.1							
95	220	18.08	620	5.5							
110	189	15.63	595	6.3							
130	161	13.28 (1)	565	7.4							
145	143	11.86	545	8.2							
170	122	10.13	520	9							
183	114	9.41	505	9.5							
211	99	8.16	485	10							
226	92	7.63 (1)	475	11							
261	80	6.59	450	12							
307	68	5.6 (1)	430	13							
344	60	5 (1)	415	14							
403	52	4.27	395	15							
430	48	4 (1)	385	16							
510	41	3.37	365	17							

(1) Finite transmission ratio *i*

P_1 = 0.5 hp

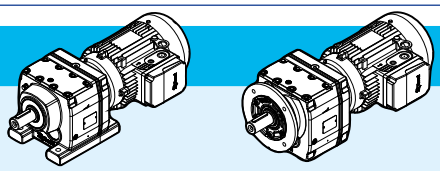

n_2 rpm	T_2 lb in	i	F_{r2} lb	SF			lb foot HB	lb foot HBZ	lb flange HB	lb flange HBZ	p.
3.9	8080	289.74	6350	3.7	**iC 973 – HB2 80 A 6 B30C**	3	295	305	330	340	158
4.4	7130	255.71	6370	4.2							
4.7	6730	241.25	6380	4.4							
5.2	6030	216.28	6390	4.9							
4.6	6880	246.54	4490	2.3	**iC 873 – HB2 80 A 6 B25C**	3	180	190	195	205	156
5.2	6040	216.54	4490	2.6							
5.5	5740	205.71	4490	2.7							
6.2	5070	181.77	4490	3.1							
7.3	4330	155.34	4490	3.6							
7.9	3970	142.41	4490	3.9							
6.8	4650	166.59	2670	1.75	**iC 773 – HB2 80 A 6 B20C**	3	105	110	115	125	154
7.8	4060	145.67	2740	2							
8.2	3860	138.39	2760	2.1							
8.8	3580	195.24 (1)	2800	2.3	**iC 773 – HB2 71 B 4 B20B**	3	100	105	115	120	
10	3050	166.59	2840	2.7							
12	2670	145.67	2870	3							
12	2540	138.39	2880	3.2							
14	2220	121.42	2900	3.6							
17	1890	102.99	2920	4.2							
18	1700	92.97	2920	4.7							
7.1	4410	158.14	1900	1.35	**iC 673 – HB2 80 A 6 B16C**	3	87	96	93	100	152
8.2	3840	137.67	2030	1.55							
8.8	3600	128.97	2070	1.65							
9.9	3180	113.94	2140	1.85							
8.6	3660	199.81	2070	1.6	**iC 673 – HB2 71 B 4 B16B**	3	84	90	90	96	
9.3	3370	184.07	2120	1.75							
11	2900	158.14	2190	2							
12	2520	137.67	2230	2.4							
13	2360	128.97	2250	2.5							
15	2090	113.94	2280	2.8							
16	1940	105.83	2290	3.1							
18	1760	95.91	2300	3.4							
20	1580	86.11	2320	3.8							
23	1360	74.17	2330	4.4							
25	1280	69.75	2340	4.6							
28	1120	61.26	2340	5.1							
30	1040	56.89	2350	5.4							
8.8	3590	128.77	1630	1.25	**iC 573 – HB2 80 A 6 B16C**	3	68	77	75	84	150
9.4	3360	120.63	1650	1.3							
11	2970	106.58	1680	1.5							
11	2760	98.99	1700	1.6							
9.2	3420	186.89	1650	1.3	**iC 573 – HB2 71 B 4 B16B**	3	65	71	72	78	
10	3150	172.17	1670	1.4							
12	2710	147.92	1710	1.6							

(1) Finite transmission ratio *i*

P_1 = 0.5 hp

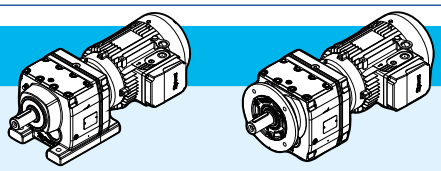

n_2 rpm	T_2 lb in	i	F_{r2} lb	SF			lb foot HB	lb foot HBZ	lb flange HB	lb flange HBZ	p.
13	2360	128.77	1730	1.85	**iC 573 – HB2 71 B 4 B16B**	3	65	71	72	78	150
14	2210	120.63	1740	1.95							
16	1950	106.58	1750	2.2							
17	1810	98.99	1760	2.4							
19	1640	89.71	1770	2.6							
21	1480	80.55	1780	2.9							
25	1270	69.23	1730	3.3							
27	1190	64.85	1700	3.6							
30	1050	57.29	1640	4							
32	975	53.22	1600	4.3							
36	885	48.23	1560	4.7							
12	2560	139.99	1160	1.15	**iC 473 – HB2 71 B 4 B16B**	3	51	57	53	59	148
14	2230	121.87	1270	1.35							
15	2090	114.17	1280	1.4							
17	1850	100.86	1310	1.6							
18	1720	93.68	1320	1.75							
20	1560	84.9	1330	1.9							
23	1400	76.23	1340	2.1							
25	1260	68.54	1350	2.4							
27	1180	64.21	1340	2.5							
30	1040	56.73	1290	2.9							
33	965	52.69	1270	3.1							
36	875	47.75	1230	3.4							
40	785	42.87	1190	3.8							
47	675	36.93	1140	4.4							
50	635	34.73	1120	4.7							
51	620	33.79	1110	3.9	**iC 472 – HB2 71 B 4 B16B**	2	51	57	54	60	
55	570	31.12	1090	3.8							
64	490	26.74	1040	6.1							
74	425	23.28	990	6.6							
79	400	21.81	970	6.9							
19	1660	90.77	1010	1.1	**iC 373 – HB2 71 B 4 B12B**	3	37	43	41	47	146
20	1550	84.61	1100	1.2							
23	1360	73.96	1220	1.35							
25	1270	69.33	1240	1.45							
28	1120	61.18	1260	1.65							
31	1020	55.76	1230	1.8							
36	880	48.08	1190	2.1							
38	820	44.81	1160	2.2							
44	720	39.17	1120	2.5							
47	675	36.72	1100	2.7							
53	595	32.4	1060	3							
60	525	28.73	1020	3.4							
70	445	24.42	980	4							

P_1 = 0.5 hp

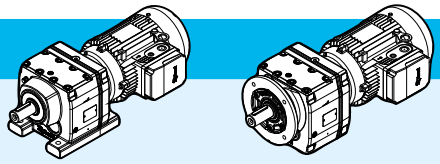

n_2 rpm	T_2 lb in	i	F_{r2} lb	SF			lb foot HB	lb foot HBZ	lb flange HB	lb flange HBZ	p.
61	520	28.32	1020	3.5	**iC 372 – HB2 71 B 4 B12B**	2	36	42	41	47	146
66	475	26.03	1000	3.8							
77	410	22.27	950	4.4							
89	355	19.31	910	5							
95	330	18.05	890	5.4							
110	285	15.6	850	6.2							
130	245	13.25	810	6.9							
145	215	11.83	785	7.5							
28	1120	61.3	800	1.1	**iC 273 – HB2 71 B 4 B12B**	3	34	40	35	41	144
31	1020	55.87	810	1.2							
36	885	48.17	785	1.4							
38	825	44.9	775	1.5							
44	720	39.25	750	1.7							
47	675	36.79	735	1.8							
53	595	32.47	715	2							
60	525	28.78	690	2.3							
70	450	24.47	660	2.7							
61	520	28.37	690	2.3	**iC 272 – HB2 71 B 4 B12B**	2	34	40	35	41	
66	480	26.09	670	2.5							
77	410	22.32	645	2.9							
89	355	19.35	620	3.4							
95	330	18.08	605	3.6							
110	285	15.63	580	4.2							
130	245	13.28 (1)	555	4.9							

P_1 = 0.75 hp

3.9	12000	289.74	6250	2.5	**iC 973 – HB2 80 B 6 B30C**	3	300	310	340	345	158
4.5	10600	255.71	6290	2.8							
4.7	10000	241.25	6310	3							
5.3	8970	216.28	6340	3.3							
6	7870	289.74	6360	3.8	**iC 973 – HB2 80 A 4 B30C**	3	300	305	335	340	
6.8	6950	255.71	6380	4.3							
7.2	6550	241.25	6380	4.5							
8	5880	216.28	6400	5							
4.6	10200	246.54	4030	1.5	**iC 873 – HB2 80 B 6 B25C**	3	185	195	205	210	156
5.3	8980	216.54	4430	1.75							
5.5	8530	205.71	4470	1.8							
6.3	7540	181.77	4490	2.1							
7.3	6440	155.34	4490	2.4							
7.1	6700	246.54	4490	2.3	**iC 873 – HB2 80 A 4 B25C**	3	180	190	200	210	
8	5880	216.54	4490	2.6							
8.5	5590	205.71	4490	2.8							
9.6	4940	181.77	4490	3.1							

(1) Finite transmission ratio *i*

P_1 = 0.75 hp

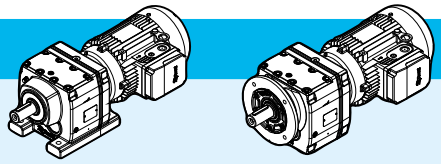

n_2 rpm	T_2 lb in	i	F_{r2} lb	SF			lb foot HB	lb foot HBZ	lb flange HB	lb flange HBZ	p.
11	4220	155.34	4490	3.7	iC 873 – HB2 80 A 4 B25C	3	180	190	200	210	156
12	3870	142.41	4490	4							
14	3390	124.97	4490	4.6							
15	3220	118.43 (1)	4490	4.8							
17	2820	103.65	4490	5.5							
10	4530	166.59	2680	1.8	iC 773 – HB2 80 A 4 B20C	3	105	115	120	130	154
12	3960	145.67	2750	2							
13	3760	138.39	2770	2.1							
14	3300	121.42	2820	2.4							
17	2800	102.99	2860	2.9							
19	2530	92.97	2880	3.2							
21	2220	81.8	2900	3.6							
23	2100	77.24	2910	3.8							
26	1790	65.77	2920	4.4							
11	4300	158.14	1930	1.4	iC 673 – HB2 80 A 4 B16C	3	90	98	96	105	152
13	3740	137.67	2040	1.6							
13	3500	128.97	2090	1.7							
15	3100	113.94	2150	1.9							
16	2870	105.83	2180	2.1							
18	2610	95.91	2220	2.3							
20	2340	86.11	2250	2.5							
23	2010	74.17	2280	2.9							
25	1890	69.75	2290	3.1							
28	1660	61.26	2310	3.5							
31	1550	56.89	2320	3.6							
14	3280	120.63	1660	1.3	iC 573 – HB2 80 A 4 B16C	3	71	79	78	86	150
16	2900	106.58	1690	1.5							
18	2690	98.99	1710	1.6							
19	2440	89.71	1720	1.75							
22	2190	80.55	1740	1.95							
25	1880	69.23	1680	2.3							
27	1760	64.85	1650	2.4							
30	1560	57.29	1590	2.7							
33	1450	53.22	1560	2.9							
36	1310	48.23	1520	3.2							
40	1180	43.3	1470	3.6							
47	1010	37.3 (1)	1410	4.1							
50	955	35.07	1390	4.4							
66	715	26.31	1280	5.8	iC 572 – HB2 80 A 4 B16C	2	68	77	76	84	
70	680	24.99 (1)	1260	6							
79	595	21.93	1210	6.9							
94	505	18.6 (1)	1150	8.1							
19	2540	93.68	1140	1.15	iC 473 – HB2 80 A 4 B16C	3	57	65	59	68	148
20	2310	84.9	1250	1.3							

(1) Finite transmission ratio *i*

P_1 = 0.75 hp

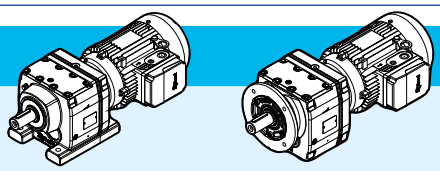

n_2 rpm	T_2 lb in	i	F_{r2} lb	SF			lb foot HB	lb foot HBZ	lb flange HB	lb flange HBZ	p.
23	2070	76.23	1280	1.45	iC 473 – HB2 80 A 4 B16C	3	57	65	59	68	148
25	1860	68.54	1300	1.6							
27	1740	64.21	1290	1.7							
31	1540	56.73	1250	1.9							
33	1430	52.69	1220	2.1							
36	1300	47.75	1190	2.3							
41	1160	42.87	1160	2.5							
47	1000	36.93	1110	3							
50	945	34.73	1090	3.1							
58	810	29.88	1050	3.7							
65	725	26.74	1020	4.1	iC 472 – HB2 80 A 4 B16C	2	57	66	59	68	
75	630	23.28	980	4.5							
80	590	21.81	960	4.7							
28	1660	61.18	990	1.1	iC 373 – HB2 80 A 4 B12C	3	42	51	47	55	146
31	1510	55.76	1100	1.2							
36	1310	48.08	1130	1.4							
39	1220	44.81	1110	1.5							
44	1060	39.17	1080	1.7							
47	1000	36.72	1060	1.8							
54	880	32.4	1030	2.1							
61	780	28.73	990	2.3							
71	665	24.42	950	2.7							
78	605	22.27	930	2.9	iC 372 – HB2 80 A 4 B12C	2	42	51	46	55	
90	525	19.31	890	3.4							
96	490	18.05	870	3.6							
112	425	15.6	840	4.2							
131	360	13.25	800	4.7							
147	320	11.83	770	5							
44	1070	39.25	705	1.15	iC 273 – HB2 80 A 4 B12C	3	40	48	41	49	144
47	1000	36.79	695	1.2							
54	880	32.47	675	1.4							
60	780	28.78	660	1.55							
71	665	24.47	635	1.8							
78	605	22.32	620	2	iC 272 – HB2 80 A 4 B12C	2	40	48	41	49	
90	525	19.35	595	2.3							
96	490	18.08	585	2.4							
111	425	15.63	565	2.8							
131	360	13.28 (1)	540	3.3							
147	320	11.86	525	3.6							
172	275	10.13	500	4							
185	255	9.41	485	4.2			39	48	40	49	
213	220	8.16	465	4.6							

(1) Finite transmission ratio *i*

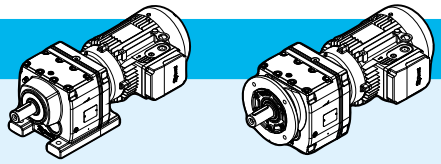

P_1 = 0.75 hp

n_2 rpm	T_2 lb in	i	F_{r2} lb	SF			lb foot HB	lb foot HBZ	lb flange HB	lb flange HBZ	p.
228	205	7.63 (1)	455	4.8	**iC 272 – HB2 80 A 4 B12C**	2	39	48	40	49	144
264	179	6.59	435	5.2							
311	152	5.6 (1)	415	5.8							
348	136	5 (1)	405	6.2							
407	116	4.27	385	6.6							
435	109	4 (1)	375	6.9							
516	92	3.37	355	7.6							

P_1 = 1 hp

4.5	13900	255.71	6190	2.1	**iC 973 – HB3 100 LA 6 B30D**	3	335	350	370	385	158
4.8	13100	241.25	6220	2.3							
5.4	11800	216.28	6260	2.5							
6.2	10100	186.3	6310	2.9							
6.8	9240	170.02	6330	3.2							
6	10500	289.74	6300	2.8	**iC 973 – HB3 90 S 4 B30C**	3	310	320	350	355	
6.8	9260	255.71	6330	3.2							
7.2	8740	241.25	6350	3.4							
8	7830	216.28	6370	3.8							
9.3	6750	186.3	6390	4.4							
10	6160	170.02	6400	4.8							
5.4	11800	216.54	3550	1.3	**iC 873 – HB3 100 LA 6 B25D**	3	225	240	240	255	156
5.6	11200	205.71	3770	1.4							
6.4	9880	181.77	4240	1.55							
7.5	8440	155.34	4490	1.85							
8.1	7740	142.41	4490	2							
9.3	6790	124.97	4490	2.3							
9.8	6430	118.43 (1)	4490	2.4							
11	5630	103.65	4490	2.8							
12	5070	93.38	4490	3.1							
7.1	8930	246.54	4450	1.75	**iC 873 – HB3 90 S 4 B25C**	3	195	205	215	220	
8	7840	216.54	4490	1.95							
8.5	7450	205.71	4490	2.1							
9.6	6580	181.77	4490	2.4							
11	5630	155.34	4490	2.8							
12	5160	142.41	4490	3							
14	4530	124.97	4490	3.4							
15	4290	118.43 (1)	4490	3.6							
17	3750	103.65	4490	4.1							
19	3380	93.38	4490	4.5							
9.6	6600	121.42	2380	1.25	**iC 773 – HB3 100 LA 6 B20D**	3	150	160	165	175	154
11	5600	102.99	2560	1.45							
12	5050	92.97	2640	1.6							

(1) Finite transmission ratio *i*

P_1 = 1 hp

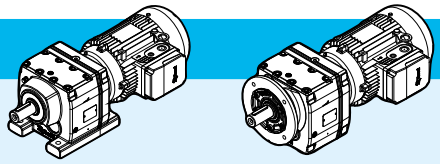

n_2 rpm	T_2 lb in	i	F_{r2} lb	SF			lb foot HB	lb foot HBZ	lb flange HB	lb flange HBZ	p.
14	4440	81.8	2710	1.8	iC 773 – HB3 100 LA 6 B20D	3	150	160	165	175	154
15	4200	77.24	2740	1.9							
18	3570	65.77	2800	2.2							
20	3130	57.68	2840	2.5							
22	2830	52.07	2870	2.8							
25	2490	45.81	2890	3.2							
10	6030	166.59	2490	1.35	iC 773 – HB3 90 S 4 B20C	3	120	130	135	140	154
12	5280	145.67	2610	1.55							
13	5010	138.39	2640	1.6							
14	4400	121.42	2720	1.85							
17	3730	102.99	2790	2.1							
19	3370	92.97	2820	2.4							
21	2960	81.8	2860	2.7							
23	2800	77.24	2870	2.8							
26	2380	65.77	2890	3.3							
30	2090	57.68	2910	3.8							
33	1890	52.07	2920	4.2							
38	1660	45.81	2920	4.6							
40	1570	43.26	2920	4.8							
13	4680	86.11	1870	1.25	iC 673 – HB3 100 LA 6 B16D	3	130	145	140	150	152
16	4030	74.17	2010	1.45							
17	3790	69.75	2060	1.55							
19	3330	61.26	2130	1.8							
20	3090	56.89	2170	1.9							
22	2800	51.56	2200	2.1							
25	2520	46.29	2240	2.4							
29	2170	39.88 (1)	2270	2.7							
31	2040	37.5	2280	2.7							
36	1750	32.27	2310	3							
40	1570	28.83	2320	3.3							
13	4990	137.67	1800	1.2	iC 673 – HB3 90 S 4 B16C	3	105	115	110	120	
13	4670	128.97	1880	1.25							
15	4130	113.94	2000	1.45							
16	3830	105.83	2050	1.55							
18	3470	95.91	2110	1.7							
20	3120	86.11	2160	1.9							
23	2690	74.17	2220	2.2							
25	2530	69.75	2240	2.3							
28	2220	61.26	2270	2.6							
31	2060	56.89	2280	2.7							
34	1870	51.56	2300	2.9							
38	1680	46.29	2310	3.2							
17	3760	69.23	1620	1.15	iC 573 – HB3 100 LA 6 B16D	3	115	125	120	135	150
18	3520	64.85	1640	1.2							

(1) Finite transmission ratio *i*

P_1 = 1 hp

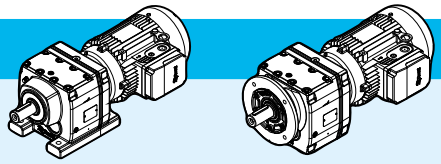

n_2 rpm	T_2 lb in	i	F_{r2} lb	SF			lb foot HB	lb foot HBZ	lb flange HB	lb flange HBZ	p.
20	3110	57.29	1680	1.35	**iC 573 – HB3 100 LA 6 B16D**	3	115	125	120	135	150
22	2890	53.22	1660	1.5							
24	2620	48.23	1620	1.6							
27	2350	43.3	1580	1.8							
31	2030	37.3 (1)	1520	2.1							
33	1910	35.07	1500	2.2							
38	1640	30.18	1440	2.6							
43	1470	26.97	1400	2.9							
16	3860	106.58	1610	1.1	**iC 573 – HB3 90 S 4 B16C**	3	85	94	92	100	150
18	3590	98.99	1640	1.2							
19	3250	89.71	1670	1.3							
22	2920	80.55	1660	1.45							
25	2510	69.23	1600	1.7							
27	2350	64.85	1580	1.8							
30	2080	57.29	1530	2							
33	1930	53.22	1500	2.2							
36	1750	48.23	1470	2.4							
40	1570	43.3	1420	2.7							
47	1350	37.3 (1)	1370	3.1							
50	1270	35.07	1350	3.3							
58	1090	30.18	1290	3.8							
65	975	26.97	1250	4.2							
66	955	26.31	1240	4.3	**iC 572 – HB3 90 S 4 B16C**	2	83	91	90	99	150
70	905	24.99 (1)	1220	4.5							
79	795	21.93	1180	5.1							
94	675	18.6 (1)	1120	6							
24	2590	47.75	1170	1.15	**iC 473 – HB3 100 LA 6 B16D**	3	99	115	100	115	148
27	2330	42.87	1220	1.25							
31	2010	36.93	1180	1.5							
33	1890	34.73	1170	1.55							
39	1620	29.88	1130	1.85							
43	1450	26.7	1090	2							
49	1280	23.59	1060	2.3							
25	2480	68.54	1240	1.2	**iC 473 – HB3 90 S 4 B16C**	3	71	79	73	82	
27	2330	64.21	1220	1.25							
31	2050	56.73	1190	1.45							
33	1910	52.69	1170	1.55							
36	1730	47.75	1140	1.7							
41	1550	42.87	1110	1.9							
47	1340	36.93	1070	2.2							

(1) Finite transmission ratio *i*

P_1 = 1 hp

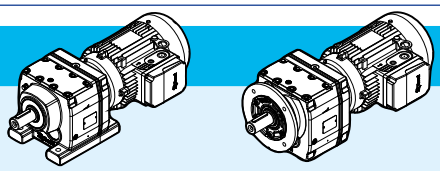

n_2 rpm	T_2 lb in	i	F_{r2} lb	SF			lb foot HB	lb foot HBZ	lb flange HB	lb flange HBZ	p.
50	1260	34.73	1050	2.4	**iC 473 – HB3 90 S 4 B16C**	3	71	79	73	82	148
58	1080	29.88	1010	2.7							
65	965	26.7	980	3.1							
74	855	23.59	950	3.5							
65	970	26.74	980	3.1	**iC 472 – HB3 90 S 4 B16C**	2	71	80	74	82	
75	845	23.28	950	3.4							
80	790	21.81	930	3.5							
90	700	19.27	900	3.8							
97	650	17.89	880	4							
107	585	16.22	850	4.2							
40	1560	28.73	1050	1.15	**iC 373 – HB3 100 LA 6 B12D**	3	83	96	88	100	146
48	1330	24.42	1010	1.35							
36	1740	48.08	980	1.05	**iC 373 – HB3 90 S 4 B12C**	3	56	65	61	69	
39	1620	44.81	1060	1.1							
44	1420	39.17	1030	1.3							
47	1330	36.72	1010	1.35							
54	1170	32.4	980	1.55							
61	1040	28.73	950	1.75							
71	885	24.42	920	2							
78	805	22.27	890	2.2	**iC 372 – HB3 90 S 4 B12C**	2	56	65	60	69	146
90	700	19.31	860	2.5							
96	655	18.05	850	2.7							
112	565	15.6	810	3.1							
131	480	13.25	775	3.5							
147	430	11.83	750	3.8							
172	365	10.11	715	4.1							
184	345	9.47	705	4.3							
60	1040	28.78	620	1.15	**iC 273 – HB3 90 S 4 B12C**	3	54	62	55	63	144
71	885	24.47	600	1.35							
78	810	22.32	590	1.5	**iC 272 – HB3 90 S 4 B12C**	2	54	62	55	63	
90	700	19.35	570	1.7							
96	655	18.08	560	1.85							
111	565	15.63	540	2.1							
131	480	13.28 (1)	520	2.5							
147	430	11.86	505	2.7							
172	365	10.13	485	3							
185	340	9.41	465	3.2			53	62	54	63	
213	295	8.16	450	3.5							
228	275	7.63 (1)	440	3.6							
264	240	6.59	425	4							
311	205	5.6 (1)	405	4.3							
348	181	5 (1)	390	4.7							

(1) Finite transmission ratio *i*

P_1 = 1.5 hp

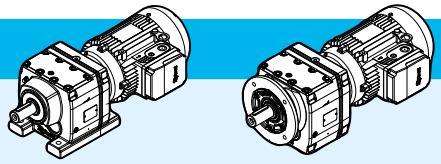

n_2 rpm	T_2 lb in	i	F_{r2} lb	SF			lb foot HB	lb foot HBZ	lb flange HB	lb flange HBZ	p.
6.2	15200	186.3	6150	1.95	**iC 973 – HB3 112 M 6 B30D**	3	355	370	390	405	158
6.8	13900	255.71	6200	2.1	**iC 973 – HB3 90 L 4 B30D**	3	320	330	355	365	
7.2	13100	241.25	6220	2.3							
8	11800	216.28	6270	2.5							
9.3	10100	186.3	6310	2.9							
10	9240	170.02	6340	3.2							
12	8190	150.78	6360	3.5							
14	6890	126.75	6380	4.2							
15	6330	116.48	6390	4.5							
8	11800	216.54	3590	1.3	**iC 873 – HB3 90 L 4 B25D**	3	200	210	220	230	156
8.5	11200	205.71	3800	1.4							
9.6	9880	181.77	4270	1.55							
11	8440	155.34	4490	1.85							
12	7740	142.41	4490	2							
14	6790	124.97	4490	2.3							
15	6430	118.43 (1)	4490	2.4							
17	5630	103.65	4490	2.7							
19	5070	93.38	4490	3							
21	4450	81.92	4490	3.4							
24	3940	72.57	4490	3.9							
27	3460	63.68 (1)	4490	4.4							
29	3280	60.35 (1)	4490	4.6							
33	2870	52.82	4490	5.3							
14	6600	121.42	2390	1.2	**iC 773 – HB3 90 L 4 B20D**	3	125	135	140	150	154
17	5600	102.99	2560	1.45							
19	5050	92.97	2640	1.6							
21	4440	81.8	2720	1.8							
23	4200	77.24	2750	1.9							
26	3570	65.77	2810	2.2							
30	3130	57.68	2840	2.5							
33	2830	52.07	2870	2.8							
38	2490	45.81	2890	3.1							
40	2350	43.26	2900	3.2							
47	2000	36.83	2880	3.7							
52	1820	33.47	2800	4							
20	4680	86.11	1880	1.25	**iC 673 – HB3 90 L 4 B16D**	3	110	120	115	125	152
23	4030	74.17	2020	1.45							
25	3790	69.75	2060	1.55							
28	3330	61.26	2140	1.75							
31	3090	56.89	2170	1.8							
34	2800	51.56	2210	1.95							
38	2520	46.29	2240	2.1							
44	2170	39.88 (1)	2270	2.4							

(1) Finite transmission ratio *i*

P_1 = 1.5 hp

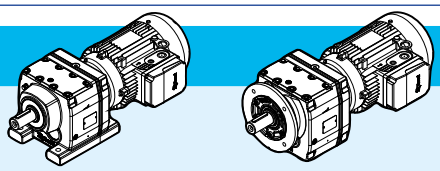

n_2 rpm	T_2 lb in	i	F_{r2} lb	SF			lb foot HB	lb foot HBZ	lb flange HB	lb flange HBZ	p.
46	2040	37.5	2290	2.5	**iC 673 – HB3 90 L 4 B16D**	3	110	120	115	125	152
54	1750	32.27	2240	2.8							
60	1570	28.83	2170	3							
62	1530	28.13	2150	3.2	**iC 672 – HB3 90 L 4 B16D**	2	110	115	115	125	
65	1450	26.72	2120	3.3							
74	1270	23.44	2040	4.4							
88	1080	19.89	1940	5							
25	3760	69.23	1490	1.15	**iC 573 – HB3 90 L 4 B16D**	3	92	100	99	105	150
27	3520	64.85	1470	1.2							
30	3110	57.29	1440	1.35							
33	2890	53.22	1410	1.45							
36	2620	48.23	1380	1.6							
40	2350	43.3	1350	1.8							
47	2030	37.3 (1)	1300	2.1							
50	1910	35.07	1290	2.2							
58	1640	30.18	1240	2.5							
65	1470	26.97	1200	2.8							
66	1430	26.31	1200	2.9	**iC 572 – HB3 90 L 4 B16D**	2	89	98	97	105	
70	1360	24.99 (1)	1180	3							
79	1190	21.93	1140	3.4							
94	1010	18.6 (1)	1090	4							
104	910	16.79	1060	4.4							
36	2590	47.75	1060	1.15	**iC 473 – HB3 90 L 4 B16D**	3	78	86	80	89	148
41	2330	42.87	1040	1.25							
47	2010	36.93	1010	1.5							
50	1890	34.73	1000	1.55							
58	1620	29.88	960	1.85							
65	1450	26.7	940	2							
74	1280	23.59	910	2.3							
75	1260	23.28	910	2.2	**iC 472 – HB3 90 L 4 B16D**	2	78	87	80	89	
80	1180	21.81	890	2.3							
90	1050	19.27	860	2.5							
97	970	17.89	850	2.7							
107	880	16.22	830	2.8							
119	790	14.56	800	3							
139	680	12.54	770	3.3							
148	640	11.79	755	3.4							
171	550	10.15	725	3.7							
192	495	9.07	700	4							
54	1760	32.4	785	1.05	**iC 373 – HB3 90 L 4 B12D**	3	63	72	67	76	146
61	1560	28.73	850	1.15							
71	1330	24.42	860	1.35							

(1) Finite transmission ratio *i*

P_1 = 1.5 hp

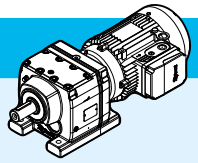
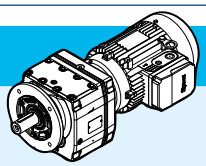

n_2 rpm	T_2 lb in	i	F_{r2} lb	SF			lb foot HB	lb foot HBZ	lb flange HB	lb flange HBZ	p.
90	1050	19.31	820	1.7	**iC 372 – HB3 90 L 4 B12D**	2	63	71	67	76	146
96	980	18.05	810	1.85							
112	850	15.6	775	2.1							
131	720	13.25	745	2.4							
147	645	11.83	725	2.5							
172	550	10.11	695	2.8							
184	515	9.47	680	2.9							
218	435	7.97	650	3.2							
261	360	6.67	615	3.6			62	71	66	75	
307	310	5.67	585	4.1							
344	275	5.06	570	4.4							
90	1050	19.35	525	1.15	**iC 272 – HB3 90 L 4 B12D**	2	60	69	61	70	144
96	980	18.08	520	1.2							
111	850	15.63	505	1.4							
131	720	13.28 (1)	490	1.65							
147	645	11.86	475	1.8							
172	550	10.13	460	2							
213	445	8.16	430	2.4			60	69	61	69	
228	415	7.63 (1)	420	2.4							
264	360	6.59	405	2.6							
311	305	5.6 (1)	390	2.9							
348	270	5 (1)	380	3.1							
407	230	4.27	365	3.4							
435	215	4 (1)	355	3.5							
516	183	3.37	340	3.9							

P_1 = 2 hp

6.8	18500	255.71	5430	1.6	**iC 973 – HB3 90 LB 4 B30D**	3	320	330	355	370	158
7.2	17500	241.25	5740	1.7							
8	15700	216.28	6130	1.9							
9.3	13500	186.3	6210	2.2							
10	12300	170.02	6250	2.4							
12	10900	150.78	6290	2.7							
14	9180	126.75	6340	3.1							
15	8440	116.48	6350	3.4							
17	7490	103.44	6370	3.8							
19	6700	92.48	6390	4.3							
9.6	13200	181.77	3090	1.2	**iC 873 – HB3 90 LB 4 B25D**	3	200	215	220	235	156
11	11300	155.34	3780	1.4							
12	10300	142.41	4120	1.5							
14	9050	124.97	4450	1.7							
15	8580	118.43 (1)	4490	1.8							

(1) Finite transmission ratio *i*

P_1 = 2 hp

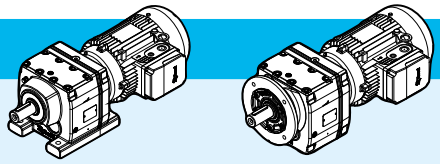

n_2 rpm	T_2 lb in	i	F_{r2} lb	SF			lb foot HB	lb foot HBZ	lb flange HB	lb flange HBZ	p.
17	7510	103.65	4490	2	iC 873 – HB3 90 LB 4 B25D	3	200	215	220	235	156
19	6760	93.38	4490	2.3							
21	5930	81.92	4490	2.6							
24	5260	72.57	4490	2.9							
27	4610	63.68 (1)	4490	3.3							
29	4370	60.35 (1)	4490	3.5							
33	3830	52.82	4490	3.9							
37	3450	47.58	4450	4.4							
42	3020	41.74	4270	4.9							
47	2670	36.84 (1)	4110	5.5							
19	6740	92.97	2370	1.2	iC 773 – HB3 90 LB 4 B20D	3	125	140	140	155	154
21	5930	81.8	2510	1.35							
23	5600	77.24	2570	1.4							
26	4760	65.77	2680	1.65							
30	4180	57.68	2750	1.9							
33	3770	52.07	2790	2.1							
38	3320	45.81	2830	2.3							
40	3130	43.26	2840	2.4							
47	2670	36.83	2830	2.8							
52	2420	33.47	2750	3							
60	2100	29	2640	3.5							
69	1830	25.23	2530	3.8							
74	1690	23.37	2470	4.3	iC 772 – HB3 90 LB 4 B20D	2	125	135	140	150	
81	1550	21.43	2410	4.8							
93	1360	18.8	2320	5.2							
25	5050	69.75	1790	1.15	iC 673 – HB3 90 LB 4 B16D	3	110	125	115	130	152
28	4440	61.26	1940	1.3							
31	4120	56.89	2010	1.35							
34	3740	51.56	2070	1.45							
38	3350	46.29	2140	1.6							
44	2890	39.88 (1)	2200	1.8							
46	2720	37.5	2220	1.9							
54	2340	32.27	2190	2.1							
60	2090	28.83	2120	2.2							
62	2040	28.13	2110	2.4	iC 672 – HB3 90 LB 4 B16D	2	110	120	115	130	
65	1940	26.72	2080	2.5							
74	1700	23.44	2000	3.3							
88	1440	19.89	1910	3.7							
97	1300	17.95	1850	4.1							
33	3860	53.22	1330	1.1	iC 573 – HB3 90 LB 4 B16D	3	92	105	99	110	150
36	3490	48.23	1310	1.2							
40	3140	43.3	1280	1.35							
47	2700	37.3 (1)	1240	1.55							

(1) Finite transmission ratio *i*

P_1 = 2 hp

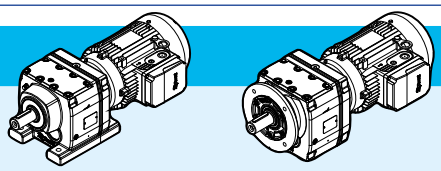

n_2 rpm	T_2 lb in	i	F_{r2} lb	SF			lb foot HB	lb foot HBZ	lb flange HB	lb flange HBZ	p.
50	2540	35.07	1230	1.65	**iC 573 – HB3 90 LB 4 B16D**	3	92	105	99	110	150
58	2190	30.18	1190	1.9							
65	1950	26.97	1160	2.1							
66	1910	26.31	1150	2.2	**iC 572 – HB3 90 LB 4 B16D**	2	89	105	97	110	
70	1810	24.99 (1)	1140	2.3							
79	1590	21.93	1100	2.6							
94	1350	18.6 (1)	1060	3							
104	1220	16.79	1030	3.3							
118	1070	14.77 (1)	1000	3.8							
125	1010	13.95 (1)	980	4							
146	860	11.88	940	4.6							
47	2680	36.93	950	1.1	**iC 473 – HB3 90 LB 4 B16D**	3	78	91	80	93	148
50	2520	34.73	940	1.2							
58	2160	29.88	910	1.35							
65	1930	26.7	890	1.55							
74	1710	23.59	870	1.75							
75	1690	23.28	870	1.7	**iC 472 – HB3 90 LB 4 B16D**	2	78	91	80	94	
80	1580	21.81	860	1.75							
90	1400	19.27	830	1.9							
97	1300	17.89	820	2							
107	1170	16.22	800	2.1							
119	1050	14.56	775	2.3							
139	910	12.54	750	2.5							
148	855	11.79	735	2.6							
171	735	10.15	705	2.8							
192	655	9.07	685	3							
217	580	8.01	665	3.2			76	89	79	92	
224	560	7.76 (1)	650	2.9							
250	505	6.96	630	3.2							
290	435	6	605	3.6							
309	410	5.64 (1)	595	3.8							
359	350	4.85	570	4.2							
401	315	4.34	550	4.4							
454	280	3.83	530	4.7							
71	1770	24.42	600	1	**iC 373 – HB3 90 LB 4 B12D**	3	63	76	67	81	146
90	1400	19.31	720	1.3	**iC 372 – HB3 90 LB 4 B12D**	2	63	76	67	80	
96	1310	18.05	750	1.4							
112	1130	15.6	745	1.6							
131	960	13.25	715	1.8							
147	855	11.83	700	1.9							
172	730	10.11	670	2.1							
184	685	9.47	660	2.2							
218	580	7.97	635	2.4							

(1) Finite transmission ratio *i*

P_1 = 2 hp

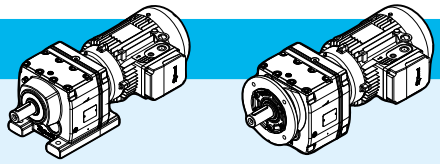

n_2 rpm	T_2 lb in	i	F_{r2} lb	SF			lb foot HB	lb foot HBZ	lb flange HB	lb flange HBZ	p.
261	485	6.67	600	2.7	**iC 372 – HB3 90 LB 4 B12D**	2	62	75	66	80	146
307	410	5.67	575	3.1							
344	365	5.06	555	3.3							
403	315	4.32	530	3.6							
430	295	4.05	520	3.7							
510	245	3.41	495	4.1							
111	1130	15.63	470	1.05	**iC 272 – HB3 90 LB 4 B12D**	2	60	74	61	75	144
131	960	13.28 (1)	460	1.25							
147	860	11.86	450	1.35							
172	735	10.13	435	1.5							
213	590	8.16	405	1.75			60	73	61	74	
228	550	7.63 (1)	400	1.8							
264	475	6.59	390	2							
311	405	5.6 (1)	375	2.2							
348	360	5 (1)	365	2.4							
407	310	4.27	350	2.5							
435	290	4 (1)	345	2.6							
516	245	3.37	330	2.9							

P_1 = 3 hp

8.1	23200	216.28	3940	1.3	**iC 973 – HB3 112 MA 4 B30E**	3	345	360	385	395	158
9.4	20000	186.3	4900	1.5							
10	18300	170.02	5430	1.6							
12	16200	150.78	6050	1.8							
14	13600	126.75	6200	2.1							
15	12500	116.48	6240	2.3							
17	11100	103.44	6280	2.6							
19	9940	92.48	6320	2.9							
21	8930	83.15	6250	3.2							
24	7750	72.17	6000	3.7							
27	7010	65.21	5830	4							
29	6440	59.92	5680	4.4							
33	5720	53.21	5490	4.9							
37	5110	47.58	5310	5.4							
14	13400	124.97	2930	1.15	**iC 873 – HB3 112 MA 4 B25E**	3	235	250	255	265	156
15	12700	118.43 (1)	3190	1.2							
17	11100	103.65	3770	1.4							
19	10000	93.38	4170	1.55							
21	8800	81.92	4460	1.75							
24	7800	72.57	4490	1.95							
28	6840	63.68 (1)	4490	2.2							
29	6480	60.35 (1)	4490	2.3							

(1) Finite transmission ratio *i*

P_1 = 3 hp

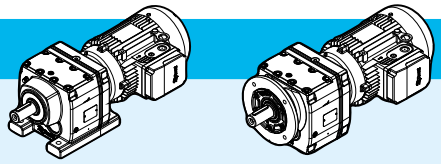

n_2 rpm	T_2 lb in	i	F_{r2} lb	SF			lb foot HB	lb foot HBZ	lb flange HB	lb flange HBZ	p.
33	5670	52.82	4480	2.7	**iC 873 – HB3 112 MA 4 B25E**	3	235	250	255	265	156
37	5110	47.58	4350	2.9							
42	4480	41.74	4190	3.3							
48	3960	36.84 (1)	4040	3.7							
54	3510	32.66 (1)	3900	4							
51	3700	34.4 (1)	3960	4	**iC 872 – HB3 112 MA 4 B25E**	2	230	245	250	260	
56	3370	31.4	3850	4.2							
63	2990	27.84 (1)	3720	4.6							
75	2510	23.4	3520	5.5							
82	2310	21.51	3440	5.8							
27	7070	65.77	2280	1.1	**iC 773 – HB3 112 MA 4 B20E**	3	160	175	175	185	154
31	6200	57.68	2450	1.25							
34	5590	52.07	2550	1.4							
38	4920	45.81	2650	1.55							
41	4650	43.26	2690	1.6							
48	3960	36.83	2730	1.85							
53	3600	33.47	2660	2							
61	3120	29	2560	2.3							
70	2710	25.23	2470	2.5							
75	2510	23.37	2410	2.9	**iC 772 – HB3 112 MA 4 B20E**	2	155	170	170	185	
82	2300	21.43	2360	3.2							
94	2020	18.8	2270	3.4							
99	1910	17.82 (1)	2230	3.6							
113	1680	15.6	2150	3.9							
125	1510	14.05	2080	4.2							
44	4280	39.88 (1)	1960	1.2	**iC 673 – HB3 112 MA 4 B16E**	3	145	155	150	165	152
47	4030	37.5	2010	1.25							
55	3470	32.27	2100	1.4							
61	3100	28.83	2040	1.5							
75	2520	23.44	1940	2.2	**iC 672 – HB3 112 MA 4 B16E**	2	140	155	150	160	
89	2140	19.89	1850	2.5							
98	1930	17.95	1800	2.7							
111	1700	15.79	1740	2.9							
118	1600	14.91	1710	3							
139	1360	12.7	1640	3.4							
153	1240	11.54	1590	3.6							
176	1070	10	1530	3.9							
202	935	8.7 (1)	1460	4.2							
226	835	7.79	1420	4			135	150	145	155	
47	4010	37.3 (1)	1120	1.05	**iC 573 – HB3 112 MA 4 B16E**	3	125	140	130	145	150
50	3770	35.07	1110	1.1							
58	3240	30.18	1090	1.25							
65	2900	26.97	1070	1.4							

(1) Finite transmission ratio *i*

P_1 = 3 hp

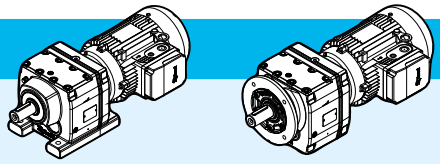

n_2 rpm	T_2 lb in	i	F_{r2} lb	SF		lb foot HB	lb foot HBZ	lb flange HB	lb flange HBZ	p.
80	2360	21.93	1030	1.75	**iC 572 – HB3 112 MA 4 B16E** 2	120	135	130	145	150
95	2000	18.6 (1)	1000	2						
105	1800	16.79	980	2.2						
119	1590	14.77 (1)	950	2.5						
126	1500	13.95 (1)	940	2.7						
148	1280	11.88	900	3.1						
163	1160	10.79	880	3.3						
188	1000	9.35	850	3.6						
194	975	9.06	840	3.4		120	130	125	140	
221	855	7.97	810	3.7						
91	2070	19.27	770	1.3	**iC 472 – HB3 112 MA 4 B16E** 2	110	125	115	125	148
109	1740	16.22	745	1.4						
121	1560	14.56	730	1.5						
140	1350	12.54	705	1.65						
149	1270	11.79	700	1.7						
173	1090	10.15	675	1.9						
194	975	9.07	655	2						
220	860	8.01	635	2.2		110	120	110	125	
227	835	7.76 (1)	620	1.95						
253	750	6.96	605	2.1						
293	645	6	580	2.4						
312	605	5.64 (1)	575	2.6						
363	520	4.85	550	2.8						
406	465	4.34	535	3						
459	410	3.83	515	3.2						
113	1680	15.6	395	1.05	**iC 372 – HB3 112 MA 4 B12E** 2	94	105	98	110	146
133	1420	13.25	490	1.2						
149	1270	11.83	545	1.3						
174	1090	10.11	600	1.4						
186	1020	9.47	620	1.45						
221	855	7.97	600	1.6						
264	715	6.67	570	1.8		93	105	97	110	
311	610	5.67	545	2.1						
348	545	5.06	530	2.2						
407	465	4.32	510	2.4						
435	435	4.05	505	2.5						
516	365	3.41	480	2.7						
174	1090	10.13	335	1	**iC 272 – HB3 112 MA 4 B12E** 2	91	105	92	105	144
267	710	6.59	320	1.35						
314	600	5.6 (1)	345	1.45						
352	535	5 (1)	340	1.55						
412	460	4.27	330	1.7						
440	430	4 (1)	325	1.75						
522	360	3.37	315	1.95						

(1) Finite transmission ratio *i*

P_1 = 4 hp

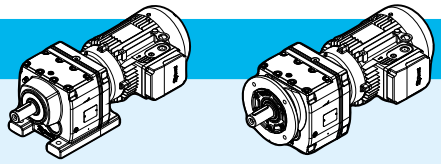

n_2 rpm	T_2 lb in	i	F_{r2} lb	SF			lb foot HB	lb foot HBZ	lb flange HB	lb flange HBZ	p.
12	21700	150.78	4430	1.35	iC 973 – HB3 112 M 4 B30E	3	355	365	390	400	158
14	18300	126.75	5460	1.6							
15	16800	116.48	5900	1.7							
17	14900	103.44	6160	1.9							
19	13300	92.48	6210	2.1							
21	12000	83.15	6100	2.4							
24	10400	72.17	5870	2.7							
27	9390	65.21	5700	3							
29	8630	59.92	5570	3.3							
33	7670	53.21	5390	3.7							
37	6850	47.58	5220	4							
41	6160	42.78	5060	4.3							
47	5350	37.13	4850	5							
53	4790	33.25	4700	5.4							
19	13500	93.38	2950	1.15	iC 873 – HB3 112 M 4 B25E	3	240	255	260	275	156
21	11800	81.92	3550	1.3							
24	10500	72.57	4040	1.45							
27	9170	63.68 (1)	4430	1.65							
29	8690	60.35 (1)	4480	1.75							
33	7610	52.82	4360	2							
37	6850	47.58	4240	2.2							
42	6010	41.74	4090	2.5							
48	5310	36.84 (1)	3960	2.8							
54	4700	32.66 (1)	3820	3							
63	4020	27.88	3650	3.3							
51	4960	34.4 (1)	3880	3	iC 872 – HB3 112 M 4 B25E	2	240	250	255	270	
56	4520	31.4	3780	3.1							
63	4010	27.84 (1)	3650	3.5							
75	3370	23.4	3470	4.1							
81	3100	21.51	3390	4.3							
92	2750	19.1	3270	4.7							
102	2460	17.08 (1)	3160	5							
114	2210	15.35	3060	5.4							
38	6600	45.81	2380	1.15	iC 773 – HB3 112 M 4 B20E	3	170	180	185	195	154
40	6230	43.26	2450	1.2							
48	5310	36.83	2600	1.4							
52	4820	33.47	2570	1.5							
60	4180	29	2480	1.75							
69	3640	25.23	2400	1.9							
75	3370	23.37	2350	2.2	iC 772 – HB3 112 M 4 B20E	2	165	180	180	195	
82	3090	21.43	2300	2.4							
93	2710	18.8	2220	2.6							
98	2570	17.82 (1)	2190	2.7							
112	2250	15.6	2110	2.9							

(1) Finite transmission ratio *i*

P_1 = 4 hp

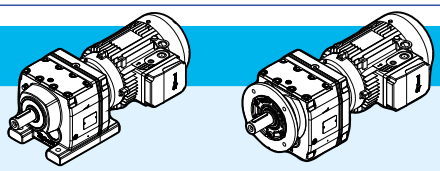

n_2 rpm	T_2 lb in	i	F_{r2} lb	SF			lb foot HB	lb foot HBZ	lb flange HB	lb flange HBZ	p.
125	2020	14.05	2040	3.2	**iC 772 – HB3 112 M 4 B20E**	2	165	180	180	195	154
142	1780	12.33	1970	3.5							
161	1570	10.88	1900	3.8							
181	1390	9.64	1830	4			160	170	175	185	
204	1240	8.59	1780	4.5							
226	1120	7.74	1730	4.9							
258	980	6.79	1660	5.3							
75	3380	23.44	1870	1.65	**iC 672 – HB3 112 M 4 B16E**	2	145	160	155	165	152
88	2860	19.89	1790	1.85							
97	2590	17.95	1750	2							
111	2280	15.79	1690	2.2							
117	2150	14.91	1670	2.3							
138	1830	12.7	1600	2.5							
152	1660	11.54	1560	2.7							
175	1440	10	1500	2.9							
65	3880	26.97	980	1.05	**iC 573 – HB3 112 M 4 B16E**	3	130	145	135	150	150
80	3160	21.93	960	1.3	**iC 572 – HB3 112 M 4 B16E**	2	130	140	135	150	
94	2680	18.6 (1)	940	1.5							
104	2420	16.79	920	1.7							
118	2130	14.77 (1)	900	1.9							
125	2010	13.95 (1)	890	2							
147	1710	11.88	860	2.3							
162	1560	10.79	840	2.5							
187	1350	9.35	820	2.7							
193	1310	9.06	810	2.6			125	140	130	145	
220	1150	7.97	790	2.8							
232	1080	7.53	775	2.9							
273	925	6.41	745	3.2							
300	840	5.82	725	3.4							
347	725	5.05	700	3.7							
399	635	4.39	675	4							
108	2340	16.22	670	1.05	**iC 472 – HB3 112 M 4 B16E**	2	115	130	120	130	148
120	2100	14.56	680	1.15							
140	1810	12.54	665	1.25							
148	1700	11.79	660	1.3							
172	1460	10.15	640	1.4							
193	1310	9.07	625	1.5							
218	1150	8.01	610	1.6			115	130	115	130	
226	1120	7.76 (1)	590	1.45							
251	1000	6.96	575	1.6							
292	865	6	560	1.8							

(1) Finite transmission ratio *i*

P_1 = 4 hp

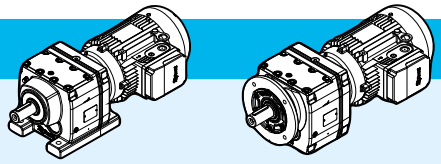

n_2 rpm	T_2 lb in	i	F_{r2} lb	SF		lb foot HB	lb foot HBZ	lb flange HB	lb flange HBZ	p.
310	810	5.64 (1)	550	1.9	**iC 472 – HB3 112 M 4 B16E** 2	115	130	120	130	148
361	700	4.85	530	2.1						
404	625	4.34	515	2.2						
457	550	3.83	500	2.4						
173	1460	10.11	340	1.05	**iC 372 – HB3 112 M 4 B12E** 2	100	115	105	120	146
185	1360	9.47	380	1.1						
219	1150	7.97	455	1.2						
262	960	6.67	400	1.35						
309	815	5.67	455	1.55						
346	730	5.06	485	1.65						
405	620	4.32	490	1.8						
432	585	4.05	485	1.85						
513	490	3.41	465	2						
312	805	5.6 (1)	193	1.1	**iC 272 – HB3 112 M 4 B12E** 2	98	110	99	110	144
350	720	5 (1)	235	1.2						
410	615	4.27	280	1.25						
438	575	4 (1)	295	1.3						
519	485	3.37	295	1.45						

P_1 = 5.4 hp

15	22500	116.48	4180	1.3	**iC 973 – HB3 112 MB 4 B30F** 3	360	375	395	415	158
17	20000	103.44	4930	1.45						
19	17900	92.48	5560	1.6						
21	16100	83.15	5880	1.75						
24	14000	72.17	5680	2						
27	12600	65.21	5530	2.2						
29	11600	59.92	5410	2.4						
33	10300	53.21	5250	2.7						
37	9200	47.58	5090	3						
41	8270	42.78	4940	3.2						
47	7180	37.13	4750	3.7						
53	6430	33.25	4610	4						
55	6200	32.05	4560	4.1	**iC 972 – HB3 112 MB 4 B30F** 2	350	370	385	405	
65	5260	27.19	4350	4.7						
70	4840	25.03	4240	5.2						
79	4330	22.37	4100	5.6						
87	3890	20.14	3980	6						
28	12300	63.68 (1)	3360	1.25	**iC 873 – HB3 112 MB 4 B25F** 3	245	265	265	285	156
29	11700	60.35 (1)	3550	1.3						
33	10200	52.82	3740	1.5						
37	9200	47.58	3860	1.65						
42	8070	41.74	3960	1.85						

(1) Finite transmission ratio *i*

P_1 = 5.4 hp

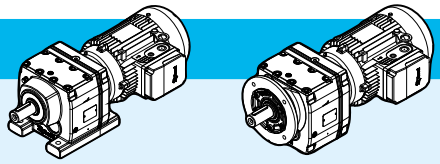

n_2 rpm	T_2 lb in	i	F_{r2} lb	SF			lb foot HB	lb foot HBZ	lb flange HB	lb flange HBZ	p.
48	7120	36.84 (1)	3840	2.1	**iC 873 – HB3 112 MB 4 B25F**	3	245	265	265	285	156
54	6310	32.66 (1)	3720	2.2							
63	5390	27.88	3570	2.5							
51	6650	34.4 (1)	3770	2.2	**iC 872 – HB3 112 MB 4 B25F**	2	245	260	260	280	
56	6070	31.4	3680	2.3							
63	5380	27.84 (1)	3560	2.6							
75	4530	23.4	3400	3							
82	4160	21.51	3320	3.2							
92	3690	19.1	3210	3.5							
103	3300	17.08 (1)	3110	3.7							
115	2970	15.35	3010	4							
132	2580	13.33	2890	4.4							
147	2310	11.93	2790	4.7							
48	7120	36.83	2270	1	**iC 773 – HB3 112 MB 4 B20F**	3	175	190	185	205	154
53	6470	33.47	2400	1.15							
61	5610	29	2370	1.3							
70	4880	25.23	2300	1.4							
75	4520	23.37	2260	1.6	**iC 772 – HB3 112 MB 4 B20F**	2	170	190	185	205	
82	4140	21.43	2210	1.75							
94	3640	18.8	2140	1.9							
99	3450	17.82 (1)	2120	2							
113	3020	15.6	2050	2.2							
125	2720	14.05	1990	2.4							
143	2380	12.33	1920	2.6							
162	2100	10.88	1860	2.8							
183	1860	9.64	1800	3			160	180	175	195	
205	1660	8.59	1750	3.4							
227	1500	7.74	1700	3.6							
259	1310	6.79	1640	3.9							
294	1160	5.99 (1)	1580	4.2							
331	1030	5.31 (1)	1520	4.4							
89	3850	19.89	1710	1.4	**iC 672 – HB3 112 MB 4 B16F**	2	150	170	155	175	152
98	3470	17.95	1670	1.5							
111	3050	15.79	1630	1.65							
118	2880	14.91	1600	1.7							
139	2460	12.7	1540	1.9							
153	2230	11.54	1510	2							
176	1930	10	1450	2.2							
202	1680	8.7 (1)	1400	2.3							
226	1510	7.79	1360	2.2			145	165	155	175	
239	1420	7.36 (1)	1340	2.3							
281	1210	6.27	1280	2.4							
309	1100	5.7	1250	2.5							

(1) Finite transmission ratio *i*

P_1 = 5.4 hp

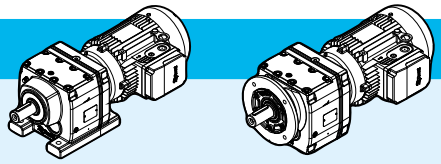

n_2 rpm	T_2 lb in	i	F_{r2} lb	SF			lb foot HB	lb foot HBZ	lb flange HB	lb flange HBZ	p.
357	955	4.93	1200	2.7	**iC 672 – HB3 112 MB 4 B16F**	2	145	170	155	175	152
410	830	4.29	1150	2.9							
95	3600	18.6 (1)	850	1.15	**iC 572 – HB3 112 MB 4 B16F**	2	130	150	140	160	150
105	3250	16.79	840	1.25							
119	2860	14.77 (1)	830	1.4							
126	2700	13.95 (1)	830	1.5							
148	2300	11.88	810	1.75							
163	2090	10.79	795	1.85							
188	1810	9.35	775	2							
194	1750	9.06	770	1.9			130	150	135	155	
221	1540	7.97	750	2							
234	1460	7.53	745	2.1							
275	1240	6.41	715	2.4							
302	1130	5.82	700	2.5							
349	975	5.05	675	2.8							
401	850	4.39	655	2.9							
173	1960	10.15	590	1.05	**iC 472 – HB3 112 MB 4 B16F**	2	120	140	125	145	148
194	1750	9.07	585	1.1							
220	1550	8.01	575	1.2			120	140	120	140	
253	1350	6.96	540	1.2							
293	1160	6	525	1.35							
312	1090	5.64 (1)	520	1.4							
363	940	4.85	505	1.55							
406	840	4.34	495	1.65							
459	740	3.83	480	1.75							

P_1 = 7.5 hp

21	22200	83.15	4230	1.3	**iC 973 – HB3 132 M 4 B30G**	3	410	435	445	470	158
25	19300	72.17	5110	1.45							
27	17400	65.21	5280	1.6							
30	16000	59.92	5190	1.75							
33	14200	53.21	5040	1.95							
37	12700	47.58	4910	2.2							
41	11400	42.78	4780	2.3							
48	9920	37.13	4610	2.7							
53	8880	33.25	4480	2.9							
64	7370	27.58	4260	3.2							
55	8560	32.05	4440	3	**iC 972 – HB3 132 M 4 B30G**	2	400	425	435	460	
65	7260	27.19	4240	3.4							
71	6680	25.03	4150	3.7							
79	5980	22.37	4020	4							
88	5380	20.14	3900	4.3							

(1) Finite transmission ratio *i*

P_1 = 7.5 hp

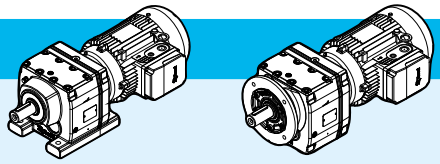

n_2 rpm	T_2 lb in	i	F_{r2} lb	SF		lb foot HB	lb foot HBZ	lb flange HB	lb flange HBZ	p.
97	4870	18.24	3790	4.5	**iC 972 – HB3 132 M 4 B30G** 2	400	425	435	460	158
109	4320	16.17	3660	4.9						
37	12700	47.58	3880	1.2	**iC 873 – HB3 132 M 4 B25G** 3	300	325	320	345	156
42	11100	41.74	3770	1.35						
48	9840	36.84 (1)	3670	1.5						
54	8720	32.66 (1)	3570	1.65						
63	7450	27.88	3440	1.8						
64	7440	27.84 (1)	3440	1.85	**iC 872 – HB3 132 M 4 B25G** 2	295	320	315	340	
76	6250	23.4	3290	2.2						
82	5740	21.51	3220	2.3						
93	5100	19.1	3120	2.5						
104	4560	17.08 (1)	3030	2.7						
115	4100	15.35	2940	2.9						
133	3560	13.33	2830	3.2						
148	3190	11.93	2740	3.4						
179	2640	9.9 (1)	2600	4						
194	2440	9.14 (1)	2560	4.4		280	305	300	320	
215	2200	8.22	2480	4.7						
248	1910	7.13	2380	5						
94	5020	18.8	2040	1.35	**iC 772 – HB3 132 M 4 B20G** 2	220	245	235	260	154
99	4760	17.82 (1)	2020	1.45						
113	4170	15.6	1960	1.55						
126	3750	14.05	1910	1.7						
144	3290	12.33	1850	1.85						
163	2900	10.88	1800	2						
184	2580	9.64	1740	2.2		210	235	225	250	
206	2290	8.59	1710	2.4						
229	2070	7.74	1660	2.6						
261	1810	6.79	1600	2.8						
295	1600	5.99 (1)	1550	3						
333	1420	5.31 (1)	1490	3.2						
112	4220	15.79	1530	1.2	**iC 672 – HB3 132 M 4 B16G** 2	205	230	210	235	152
119	3980	14.91	1510	1.2						
139	3390	12.7	1460	1.35						
153	3080	11.54	1440	1.45						
177	2670	10	1390	1.55						
203	2320	8.7 (1)	1350	1.7						
227	2080	7.79	1320	1.6		200	225	205	230	
240	1970	7.36 (1)	1300	1.65						
282	1670	6.27	1250	1.75						
311	1520	5.7	1210	1.8						
359	1320	4.93	1170	1.95						
412	1150	4.29	1120	2.1						

(1) Finite transmission ratio *i*

P_1 = 7.5 hp

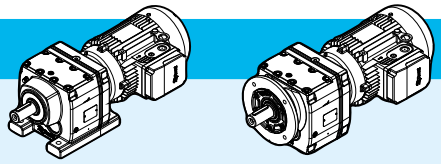

n_2 rpm	T_2 lb in	i	F_{r2} lb	SF			lb foot HB	lb foot HBZ	lb flange HB	lb flange HBZ	p.
127	3730	13.95 (1)	675	1.1	**iC 572 – HB3 132 M 4 B16G**	2	185	210	190	215	150
149	3170	11.88	725	1.25							
164	2880	10.79	720	1.35							
189	2500	9.35	710	1.45							
222	2130	7.97	700	1.5			180	205	190	210	
235	2010	7.53	695	1.55							
276	1710	6.41	675	1.75							
304	1560	5.82	660	1.8							
351	1350	5.05	645	2							
403	1170	4.39	625	2.1							
365	1300	4.85	465	1.15	**iC 472 – HB3 132 M 4 B16G**	2	170	195	175	200	148
408	1160	4.34	460	1.2							
462	1020	3.83	450	1.3							

P_1 = 10 hp

24	25800	72.17	3210	1.1	**iC 973 – HB3 132 MB 4 B30G**	3	435	455	470	495	158
27	23400	65.21	4980	1.2							
29	21500	59.92	4910	1.3							
33	19100	53.21	4800	1.45							
37	17000	47.58	4690	1.6							
41	15300	42.78	4580	1.75							
47	13300	37.13	4440	2							
53	11900	33.25	4320	2.2							
64	9880	27.58	4130	2.4							
55	11500	32.05	4290	2.2	**iC 972 – HB3 132 MB 4 B30G**	2	425	450	460	485	
65	9740	27.19	4110	2.5							
70	8960	25.03	4030	2.8							
79	8010	22.37	3910	3							
87	7210	20.14	3800	3.2							
96	6530	18.24	3700	3.4							
48	13200	36.84 (1)	3470	1.1	**iC 873 – HB3 132 MB 4 B25G**	3	325	350	340	365	156
54	11700	32.66 (1)	3390	1.2							
63	9990	27.88	3280	1.35							
63	9970	27.84 (1)	3280	1.4	**iC 872 – HB3 132 MB 4 B25G**	2	320	345	335	360	
75	8380	23.4	3160	1.65							
82	7700	21.51	3100	1.75							
92	6840	19.1	3010	1.9							
103	6120	17.08 (1)	2930	2							
115	5500	15.35	2860	2.2							
132	4770	13.33	2750	2.4							
147	4270	11.93	2670	2.6							
178	3550	9.9 (1)	2540	3							
193	3270	9.14 (1)	2520	3.3			305	330	320	345	
214	2940	8.22	2440	3.5							

(1) Finite transmission ratio *i*

P_1 = 10 hp

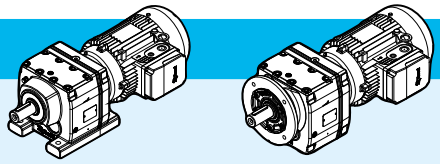

n_2 rpm	T_2 lb in	i	F_{r2} lb	SF			lb foot HB	lb foot HBZ	lb flange HB	lb flange HBZ	p.
247	2550	7.13	2340	3.7	**iC 872 – HB3 132 MB 4 B25G**	2	305	345	335	360	156
275	2290	6.39	2270	4							
332	1900	5.3 (1)	2140	4.3							
94	6730	18.8	1540	1.05	**iC 772 – HB3 132 MB 4 B20G**	2	245	265	255	280	154
99	6380	17.82 (1)	1600	1.1							
113	5590	15.6	1740	1.2							
125	5030	14.05	1820	1.3							
143	4410	12.33	1770	1.4							
162	3900	10.88	1720	1.5							
183	3450	9.64	1680	1.65			235	260	250	275	
205	3080	8.59	1660	1.85							
227	2770	7.74	1620	1.95							
259	2430	6.79	1560	2.1							
294	2150	5.99 (1)	1510	2.2							
331	1900	5.31 (1)	1460	2.4							
139	4550	12.7	1250	1	**iC 672 – HB3 132 MB 4 B16G**	2	225	250	235	255	152
153	4130	11.54	1350	1.1							
176	3580	10	1320	1.15							
202	3120	8.7 (1)	1280	1.25							
226	2790	7.79	1260	1.2			220	245	230	255	
239	2640	7.36 (1)	1240	1.25							
281	2240	6.27	1200	1.3							
309	2040	5.7	1170	1.35							
357	1770	4.93	1130	1.45							
410	1540	4.29	1090	1.55							
221	2850	7.97	460	1.1	**iC 572 – HB3 132 MB 4 B16G**	2	205	230	210	235	150
234	2700	7.53	510	1.15							
275	2300	6.41	625	1.3							
302	2090	5.82	615	1.35							
349	1810	5.05	605	1.5							
401	1570	4.39	590	1.6							

P_1 = 12.3 hp

33	23400	53.21	4580	1.2	**iC 973 – HB3 132 MC 4 B30H**	3	435	455	470	495	158
37	20900	47.58	4490	1.3							
41	18800	42.78	4400	1.4							
48	16300	37.13	4280	1.65							
53	14600	33.25	4180	1.75							
64	12100	27.58	4010	1.95							
71	11000	25.03	3920	2.3	**iC 972 – HB3 132 MC 4 B30H**	2	425	450	460	485	
79	9830	22.37	3820	2.5							
88	8850	20.14	3720	2.6							
97	8010	18.24	3630	2.8							

(1) Finite transmission ratio *i*

P_1 = 12.3 hp

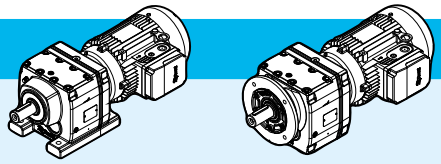

n_2 rpm	T_2 lb in	i	F_{r2} lb	SF			lb foot HB	lb foot HBZ	lb flange HB	lb flange HBZ	p.
109	7100	16.17	3510	3	**iC 972 – HB3 132 MC 4 B30H**	2	425	450	460	485	158
121	6420	14.62	3420	3.2							
142	5440	12.39	3270	3.6							
82	9450	21.51	2990	1.4	**iC 872 – HB3 132 MC 4 B25H**	2	320	345	335	360	156
92	8390	19.1	2920	1.55							
103	7500	17.08 (1)	2850	1.65							
115	6740	15.35	2780	1.75							
132	5850	13.33	2690	1.95							
148	5240	11.93	2610	2.1							
178	4350	9.9 (1)	2490	2.4							
193	4020	9.14 (1)	2480	2.7			305	330	320	345	
215	3610	8.22	2410	2.9							
247	3130	7.13	2310	3							
276	2810	6.39	2240	3.2							
126	6170	14.05	1370	1.05	**iC 772 – HB3 132 MC 4 B20H**	2	245	265	255	280	154
143	5410	12.33	1500	1.15							
162	4780	10.88	1600	1.25							
183	4240	9.64	1620	1.3			235	260	250	275	
228	3400	7.74	1560	1.6							
260	2980	6.79	1520	1.75							
295	2630	5.99 (1)	1480	1.85							
332	2330	5.31 (1)	1430	1.95							

P_1 = 15 hp

n_2 rpm	T_2 lb in	i	F_{r2} lb	SF			lb foot HB	lb foot HBZ	lb flange HB	lb flange HBZ	p.
37	25300	47.58	4260	1.1	**iC 973 – HB3 160 M 4 B30H**	3	315	–	355	–	158
41	22800	42.78	4190	1.15							
48	19800	37.13	4100	1.35							
53	17700	33.25	4020	1.45							
64	14700	27.58	3880	1.6							
71	13300	25.03	3800	1.9	**iC 972 – HB3 160 M 4 B30H**	2	310	–	345	–	
79	11900	22.37	3710	2							
88	10700	20.14	3620	2.2							
97	9710	18.24	3540	2.3							
110	8610	16.17	3430	2.5							
121	7790	14.62	3350	2.6							
143	6600	12.39	3210	2.9							
164	5770	10.83	3090	3.2							
191	4950	9.29	3010	3.6			285	–	320	–	
211	4470	8.39	2930	4							
249	3790	7.12	2790	4.7							
286	3310	6.21	2680	5.1							
83	11500	21.51	2870	1.15	**iC 872 – HB3 160 M 4 B25H**	2	200	–	220	–	156
93	10200	19.1	2810	1.25							

(1) Finite transmission ratio *i*

P_1 = 15 hp

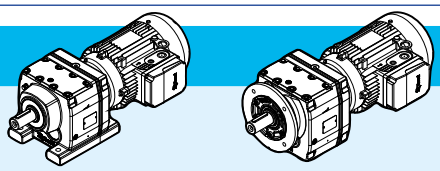

n_2 rpm	T_2 lb in	i	F_{r2} lb	SF		lb foot HB	lb foot HBZ	lb flange HB	lb flange HBZ	p.
104	9100	17.08 (1)	2750	1.35	**iC 872 – HB3 160 M 4 B25H** 3	200	–	220	–	156
116	8180	15.35	2690	1.45						
133	7100	13.33	2610	1.6						
149	6360	11.93	2540	1.7						
179	5270	9.9 (1)	2430	2						
194	4870	9.14 (1)	2440	2.2		185	–	200	–	
216	4380	8.22	2370	2.4						
249	3800	7.13	2280	2.5						
278	3400	6.39	2210	2.7						
335	2820	5.3 (1)	2100	2.9						
163	5790	10.88	1190	1	**iC 772 – HB3 160 M 4 B20H** 2	120	–	135	–	154
184	5140	9.64	1310	1.1		110	–	125	–	
229	4120	7.74	1220	1.3						
261	3620	6.79	1320	1.4						
296	3190	5.99 (1)	1390	1.5						
334	2830	5.31 (1)	1400	1.6						

P_1 = 20 hp

48	26400	37.13	3760	1	**iC 973 – HB3 160 L 4 B30H** 3	315	–	355	–	158
53	23600	33.25	3720	1.1						
64	19600	27.58	3630	1.2						
71	17800	25.03	3570	1.4	**iC 972 – HB3 160 L 4 B30H** 2	310	–	345	–	
79	15900	22.37	3500	1.5						
88	14300	20.14	3440	1.6						
97	13000	18.24	3370	1.7						
110	11500	16.17	3290	1.85						
121	10400	14.62	3220	1.95						
143	8800	12.39	3100	2.2						
164	7690	10.83	3000	2.4						
191	6590	9.29	2940	2.7		285	–	320	–	
211	5960	8.39	2860	3						
249	5050	7.12	2730	3.5						
286	4410	6.21	2630	3.8						
104	12100	17.08 (1)	2560	1	**iC 872 – HB3 160 L 4 B25H** 2	200	–	220	–	156
116	10900	15.35	2520	1.1						
133	9460	13.33	2460	1.2						
149	8470	11.93	2410	1.3						
179	7030	9.9 (1)	2320	1.5						
194	6490	9.14 (1)	2360	1.65		185	–	200	–	
216	5840	8.22	2300	1.75						
249	5070	7.13	2220	1.85						
278	4540	6.39	2150	2						
335	3760	5.3 (1)	2050	2.1						

(1) Finite transmission ratio *i*

P_1 = 25 hp

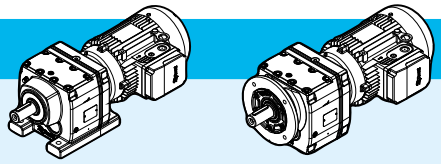

n_2 rpm	T_2 lb in	i	F_{r2} lb	SF			lb foot HB	lb foot HBZ	lb flange HB	lb flange HBZ	p.
88	17800	20.14	3250	1.3	**iC 972 – HB3 180 M 4 B30L**	2	310	–	345	–	158
98	16100	18.24	3200	1.35							
110	14300	16.17	3140	1.5							
122	12900	14.62	3080	1.55							
144	11000	12.39	2980	1.75							
164	9580	10.83	2900	1.95							
192	8220	9.29	2870	2.2			285	–	320	–	
212	7430	8.39	2800	2.4							
250	6300	7.12	2680	2.8							
286	5500	6.21	2580	3							
342	4600	5.2	2460	3.4							
396	3980	4.5 (1)	2360	3.6							
149	10600	11.93	2280	1.05	**iC 872 – HB3 180 M 4 B25L**	2	200	–	220	–	156
180	8760	9.9 (1)	2210	1.2							
195	8090	9.14 (1)	2270	1.3			185	–	200	–	
217	7280	8.22	2220	1.4							
249	6320	7.13	2150	1.5							
279	5650	6.39	2090	1.6							
336	4690	5.3 (1)	2000	1.7							

P_1 = 30 hp

88	21400	20.14	3070	1.1	**iC 972 – HB3 180 L 4 B30L**	2	310	–	345	–	158
98	19400	18.24	3040	1.15							
110	17200	16.17	2990	1.25							
122	15500	14.62	2950	1.3							
144	13200	12.39	2870	1.45							
164	11500	10.83	2800	1.6							
192	9860	9.29	2800	1.8							
212	8920	8.39	2740	2							
250	7560	7.12	2630	2.3							
286	6600	6.21	2540	2.5							
342	5520	5.2	2420	2.9							
396	4780	4.5 (1)	2330	3							
180	10500	9.9 (1)	2110	1	**iC 872 – HB3 180 L 4 B25L**	2	200	–	220	–	156
195	9710	9.14 (1)	2190	1.1			185	–	200	–	
217	8730	8.22	2150	1.2							
249	7580	7.13	2090	1.25							
279	6790	6.39	2040	1.35							
336	5630	5.3 (1)	1950	1.45							

(1) Finite transmission ratio *i*

P_1 = 40 hp

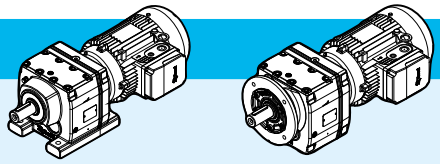

n_2 rpm	T_2 lb in	i	F_{r2} lb	SF			lb foot HB	lb foot HBZ	lb flange HB	lb flange HBZ	p.
122	20700	14.62	2680	1	**iC 972 – HB3 200 L 4 B30M**	2	320	–	355	–	158
144	17500	12.39	2640	1.1							
165	15300	10.83	2600	1.2							
192	13100	9.29	2670	1.35			295	–	330	–	
213	11900	8.39	2610	1.5							
251	10000	7.12	2520	1.75							
287	8780	6.21	2450	1.9							
343	7340	5.2	2340	2.1							
397	6360	4.5 (1)	2260	2.3							

(1) Finite transmission ratio *i*

page intentionally left blank

(1) Finite transmission ratio *i*

10

Helical inline Dimensional drawings - iC

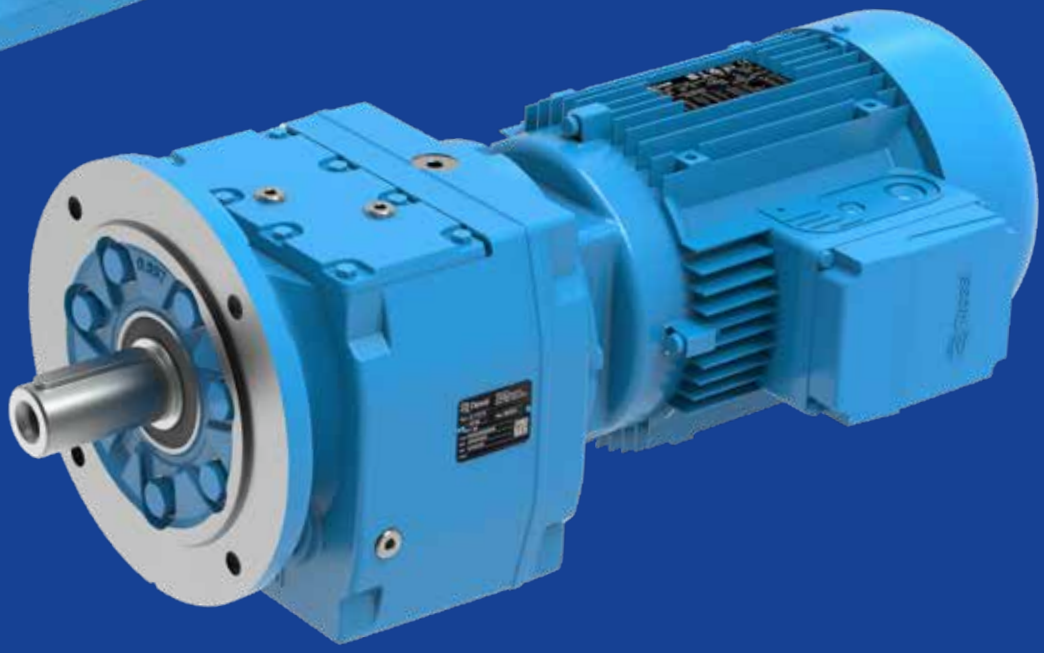

Section contents

10.1	iC 27...	144
10.2	iC 37...	146
10.3	iC 47...	148
10.4	iC 57...	150
10.5	iC 67...	152
10.6	iC 77..	154
10.7	iC 87...	156
10.8	iC 97...	158

10.1

iC 27...PA

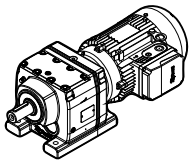

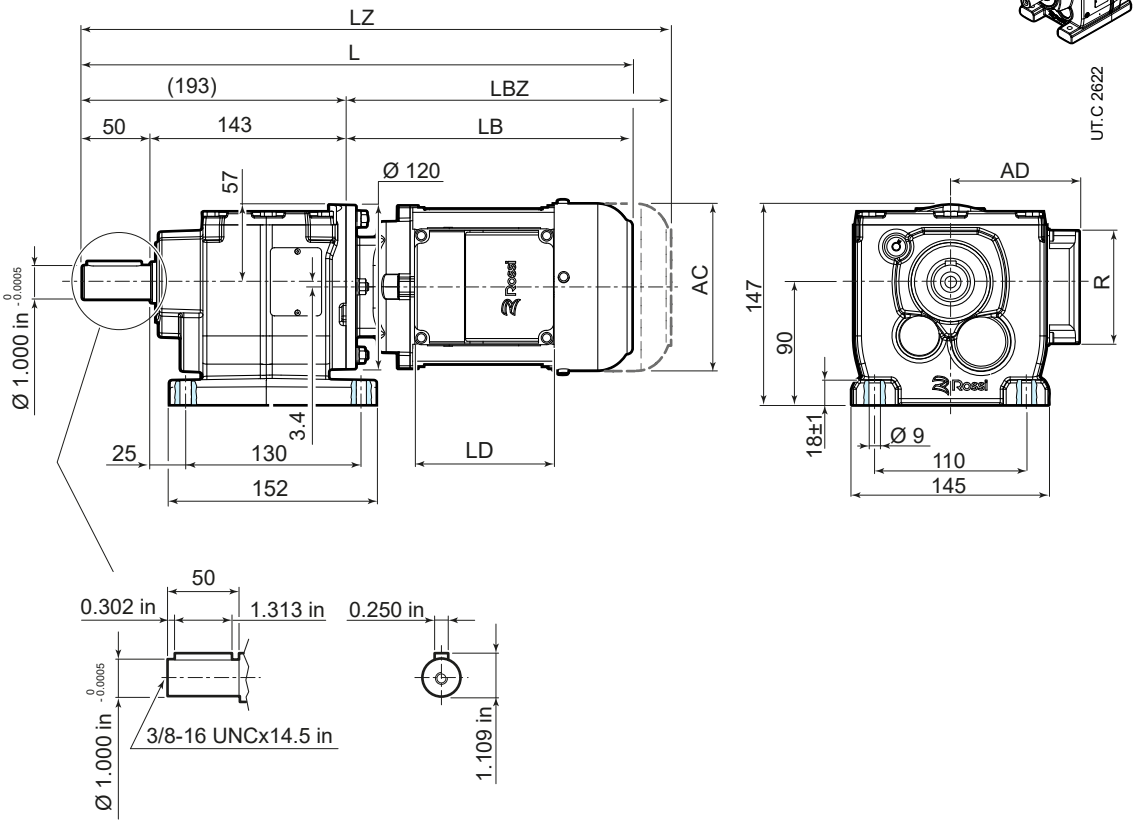

97 83 274

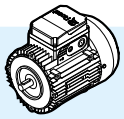

	63	71	80	90S [2]	90L	100	112
AC	123	138	156	176	176	194	218
AD	95	112	121	141	141	151	163
LB	211	237	266	290	320	351	389
LBZ	266	299	335	369	399	446	488
L [1]	404	430	459	483	513	544	582
LZ [1]	459	492	528	562	592	639	681
LD	103	103	103	136	136	136	136
R	86	86	86	106	106	106	106

[1] See also pages 89, 90.
[2] The motor protrudes the gear reducer foot mounting surface.

iC 27...FA

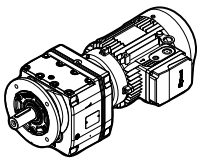

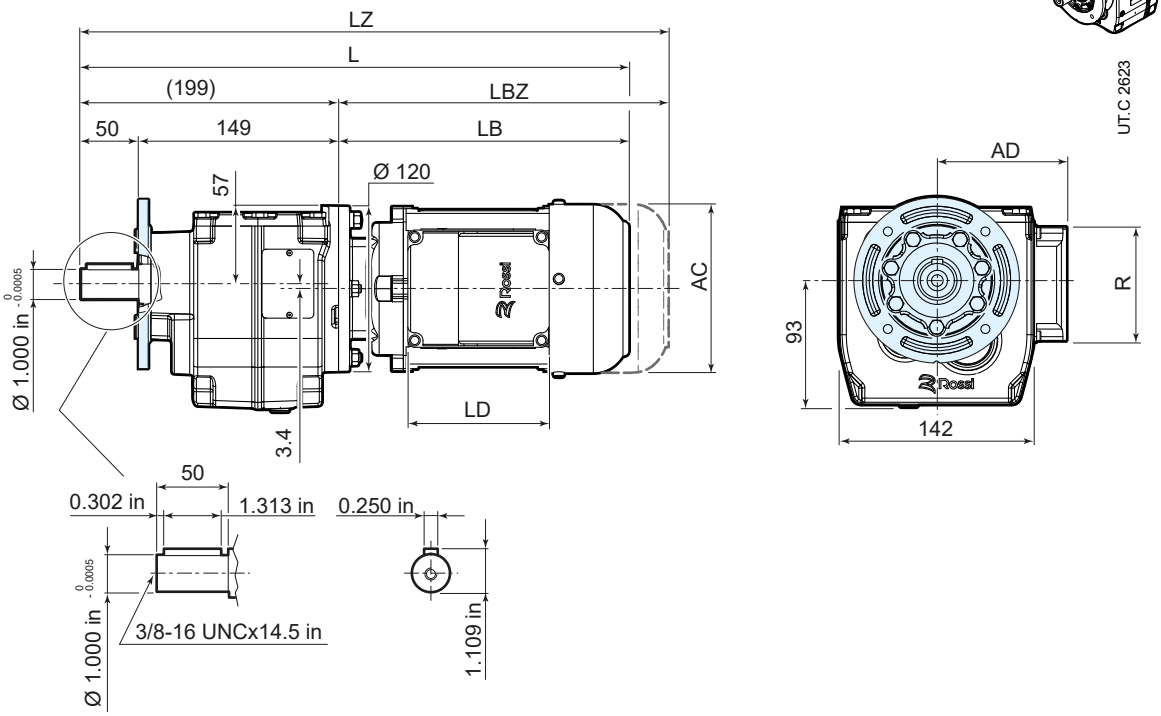

F212 Ø 120

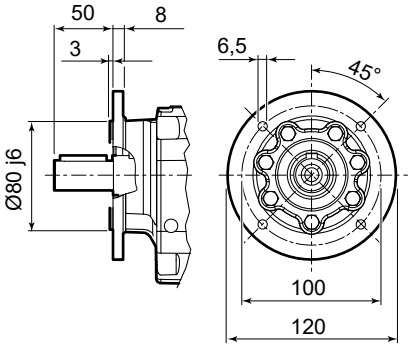

F214 Ø 140

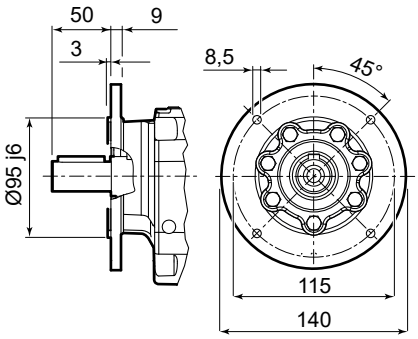

F216 Ø 160

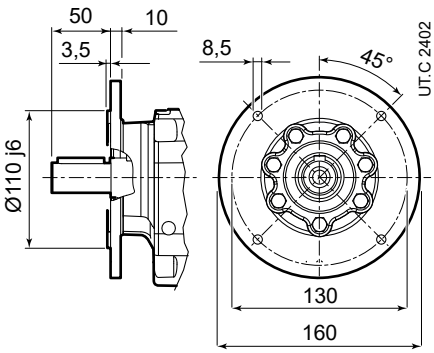

97 83 274

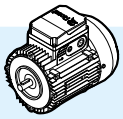

	63	71	80	90S	90L	100	112
AC	123	138	156	176	176	194	218
AD	95	112	121	141	141	151	163
LB	211	237	266	290	320	351	389
LBZ	266	299	335	369	399	446	488
L [1]	410	436	465	489	519	550	588
LZ [1]	465	498	534	568	598	645	687
LD	103	103	103	136	136	136	136
R	86	86	86	106	106	106	106

[1] See also pages 89, 90.

10.2

iC 37...PA

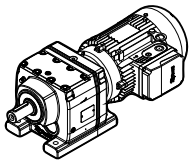

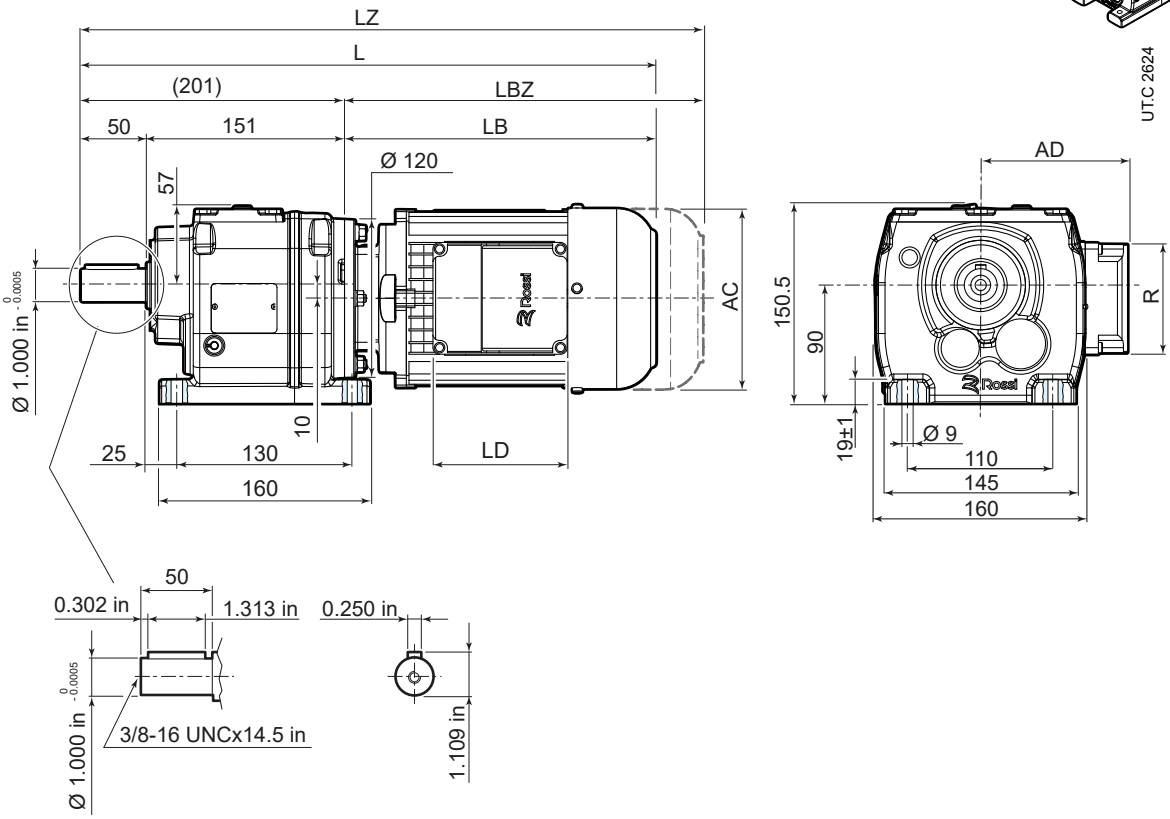

97 83 274

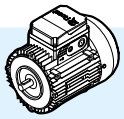

	63	71	80	90S [2]	90L	100	112
AC	123	138	156	176	176	194	218
AD	95	112	121	141	141	151	163
LB	211	237	266	290	320	351	389
LBZ	266	299	335	369	399	446	488
L [1]	412	438	467	491	521	552	590
LZ [1]	467	500	536	570	600	647	689
LD	103	103	103	136	136	136	136
R	86	86	86	106	106	106	106

[1] See also pages 89, 90.
[2] The motor protrudes the gear reducer foot mounting surface.

iC 37...FA

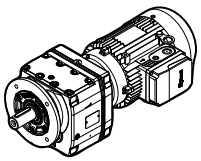

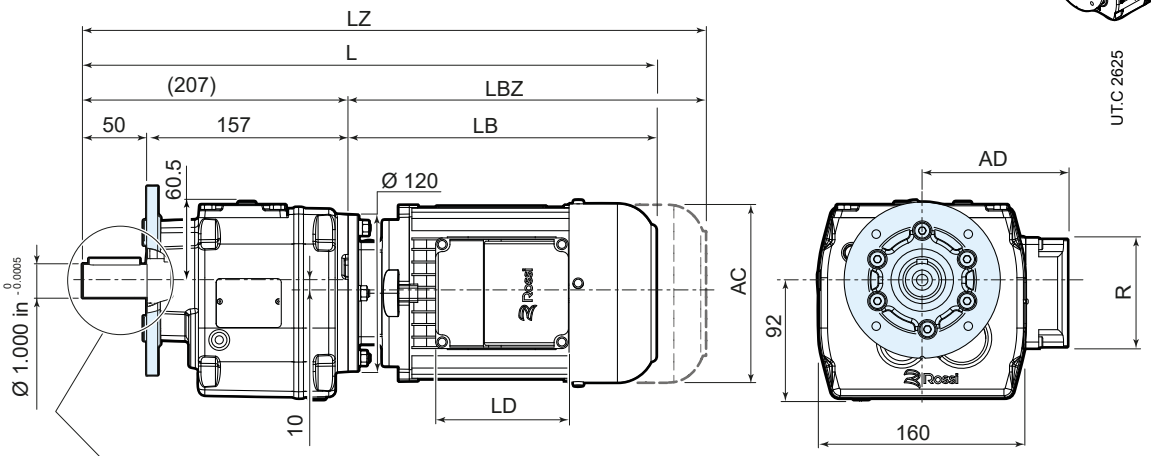

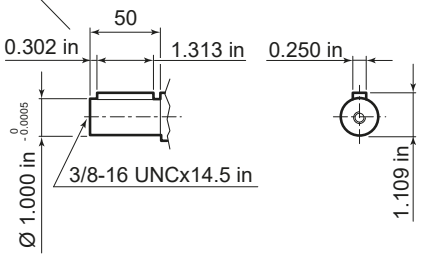

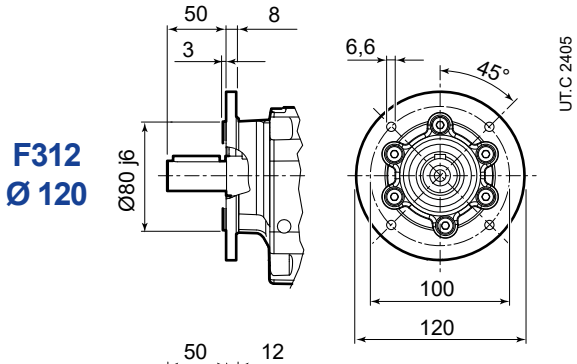

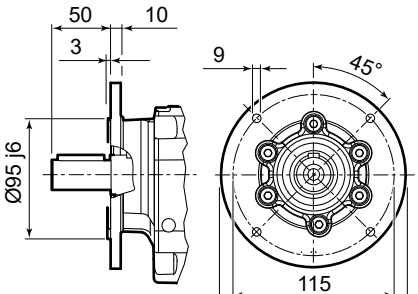

F314
Ø 140

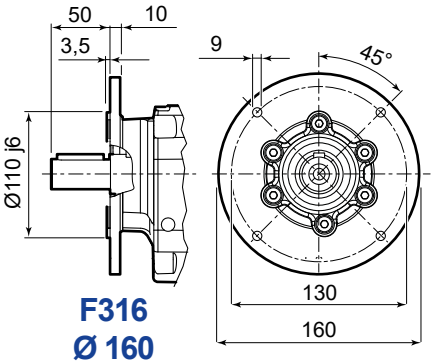

F316
Ø 160

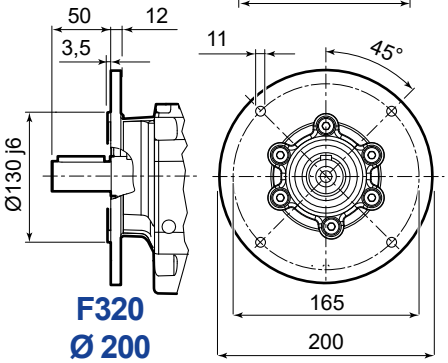

F320
Ø 200

97 83 274

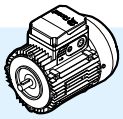

	63	71	80	90S	90L	100	112
AC	123	138	156	176	176	194	218
AD	95	112	121	141	141	151	163
LB	211	237	266	290	320	351	389
LBZ	266	299	335	369	399	446	488
L [1]	418	444	473	497	527	558	596
LZ [1]	473	506	542	576	606	653	695
LD	103	103	103	136	136	136	136
R	86	86	86	106	106	106	106

[1] See also pages 89, 90.

10.3

iC 47...PA

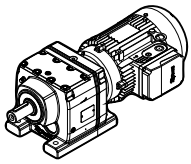

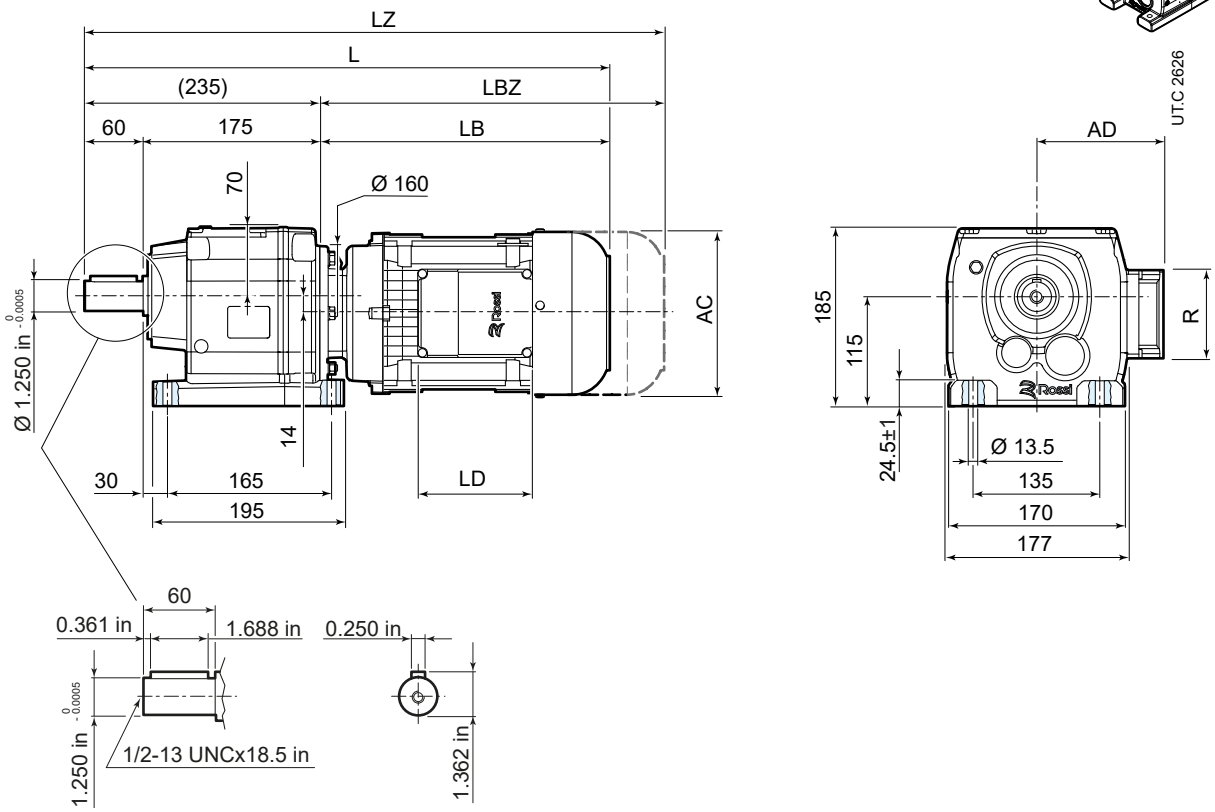

97 83 274

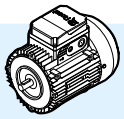

	63	71	80	90S [2]	90L	100	112	132S	132M
AC	123	138	156	176	176	194	218	257	257
AD	95	112	121	141	141	151	163	194	194
LB	205	231	260	283	313	345	383	439	499
LBZ	260	293	329	362	392	440	482	547	607
L [1]	440	466	495	518	548	580	618	674	734
LZ [1]	495	528	564	597	627	675	717	782	842
LD	103	103	103	136	136	136	136	190	190
R	86	86	86	106	106	106	106	148	148

[1] See also pages 89, 90.
[2] The motor protrudes the gear reducer foot mounting surface.

iC 47...FA

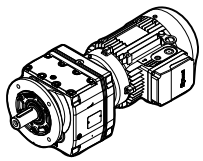

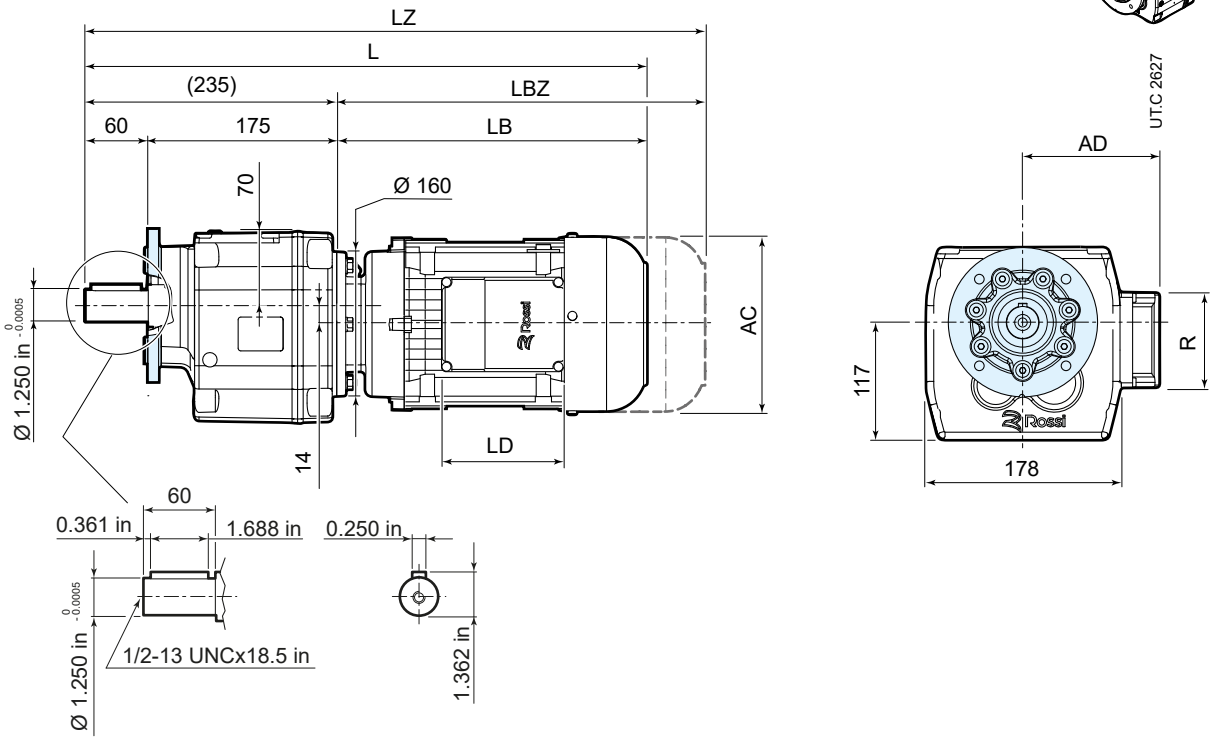

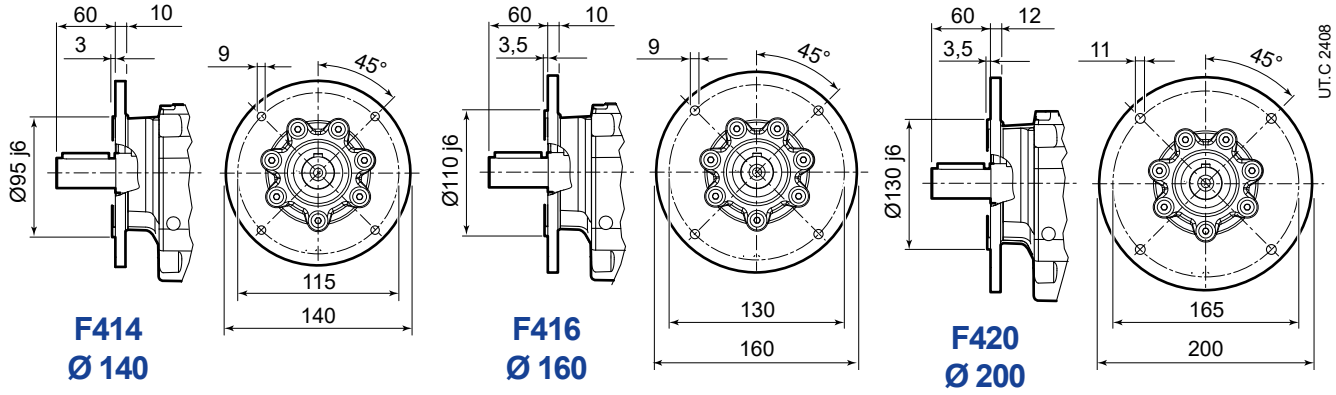

97 83 274

	63	71	80	90S	90L	100	112	132S	132M
AC	123	138	156	176	176	194	218	257	257
AD	95	112	121	141	141	151	163	194	194
LB	205	231	260	283	313	345	383	439	499
LBZ	260	293	329	362	392	440	482	547	607
L [1]	440	466	495	518	548	580	618	674	734
LZ [1]	495	528	564	597	627	675	717	782	842
LD	103	103	103	136	136	136	136	190	190
R	86	86	86	106	106	106	106	148	148

[1] See also pages 89, 90.

10.4

iC 57...PA

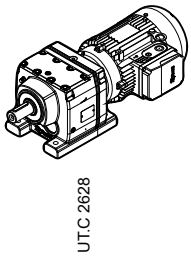

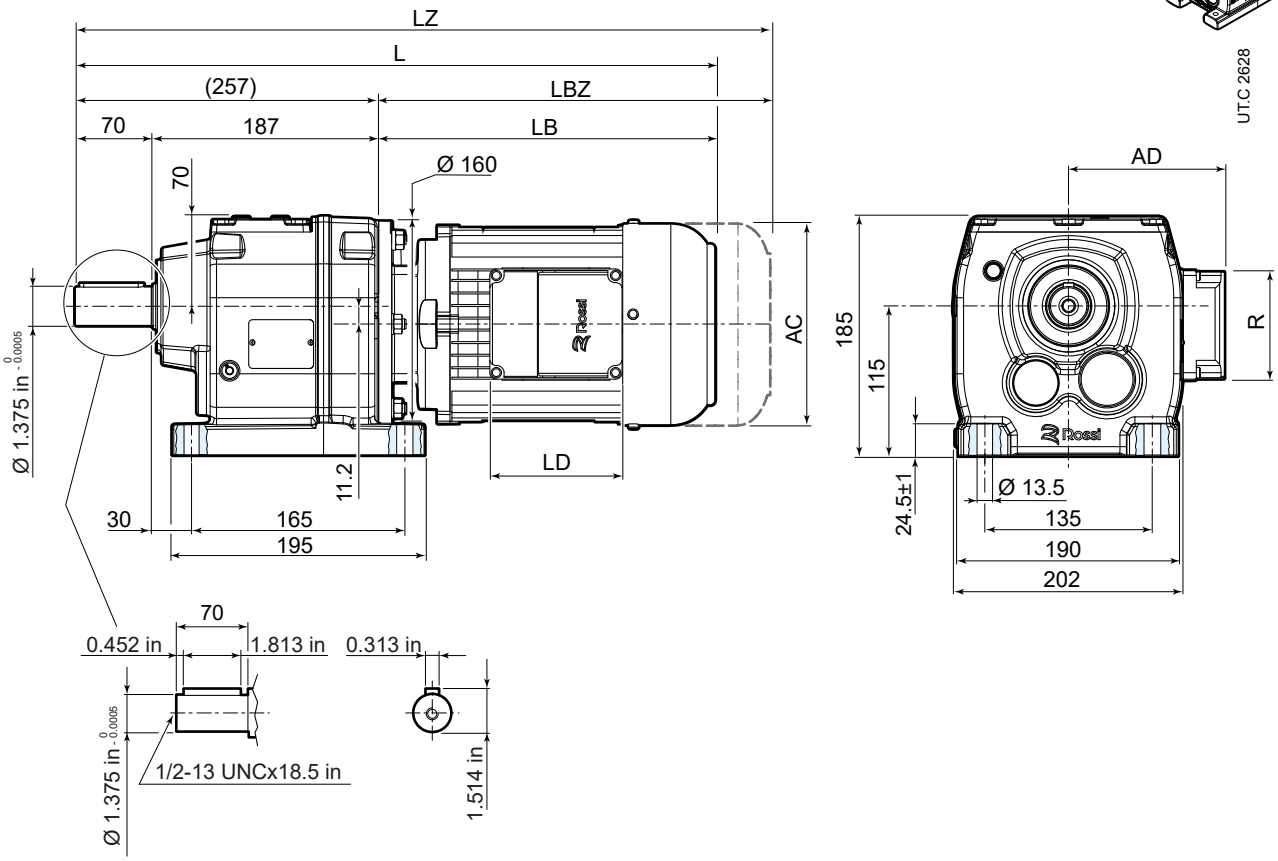

97 83 274

	63	71	80	90S [2]	90L	100	112	132S	132M
AC	123	138	156	176	176	194	218	257	257
AD	95	112	121	141	141	151	163	194	194
LB	205	231	260	283	313	345	383	439	499
LBZ	260	293	329	362	392	440	482	547	607
L [1]	462	488	517	540	570	602	640	696	756
LZ [1]	517	550	586	619	649	697	739	804	864
LD	103	103	103	136	136	136	136	190	190
R	86	86	86	106	106	106	106	148	148

[1] See also pages 89, 90.
[2] The motor protrudes the gear reducer foot mounting surface.

iC 57...FA

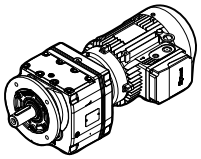

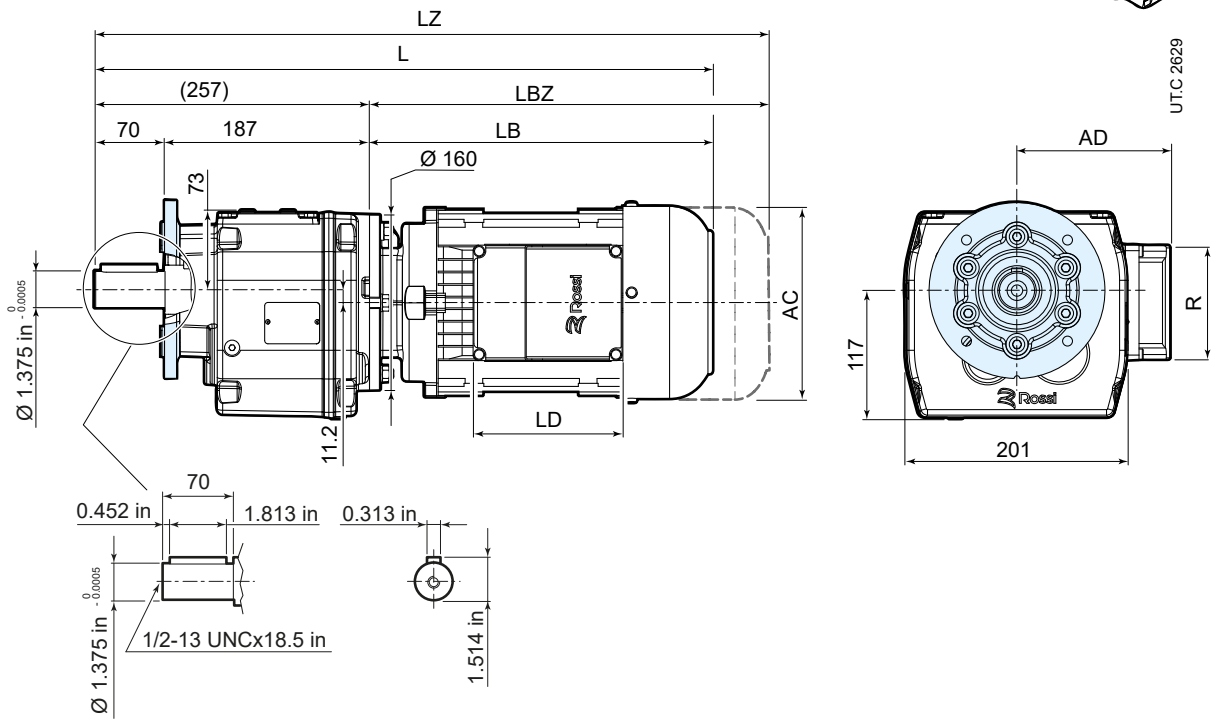

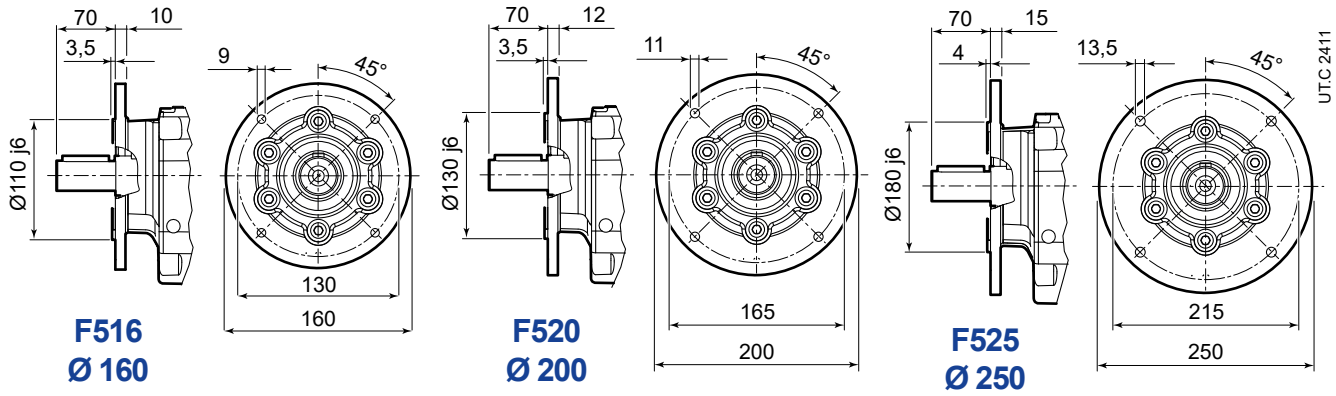

97 83 274

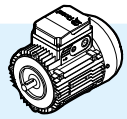

	63	71	80	90S	90L	100	112	132S	132M
AC	123	138	156	176	176	194	218	257	257
AD	95	112	121	141	141	151	163	194	194
LB	205	231	260	283	313	345	383	439	499
LBZ	260	293	329	362	392	440	482	547	607
L [1]	462	488	517	540	570	602	640	696	756
LZ [1]	517	550	586	619	649	697	739	804	864
LD	103	103	103	136	136	136	136	190	190
R	86	86	86	106	106	106	106	148	148

[1] See also pages 89, 90.

10.5

iC 67...PA

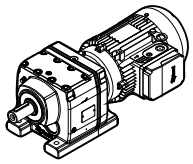

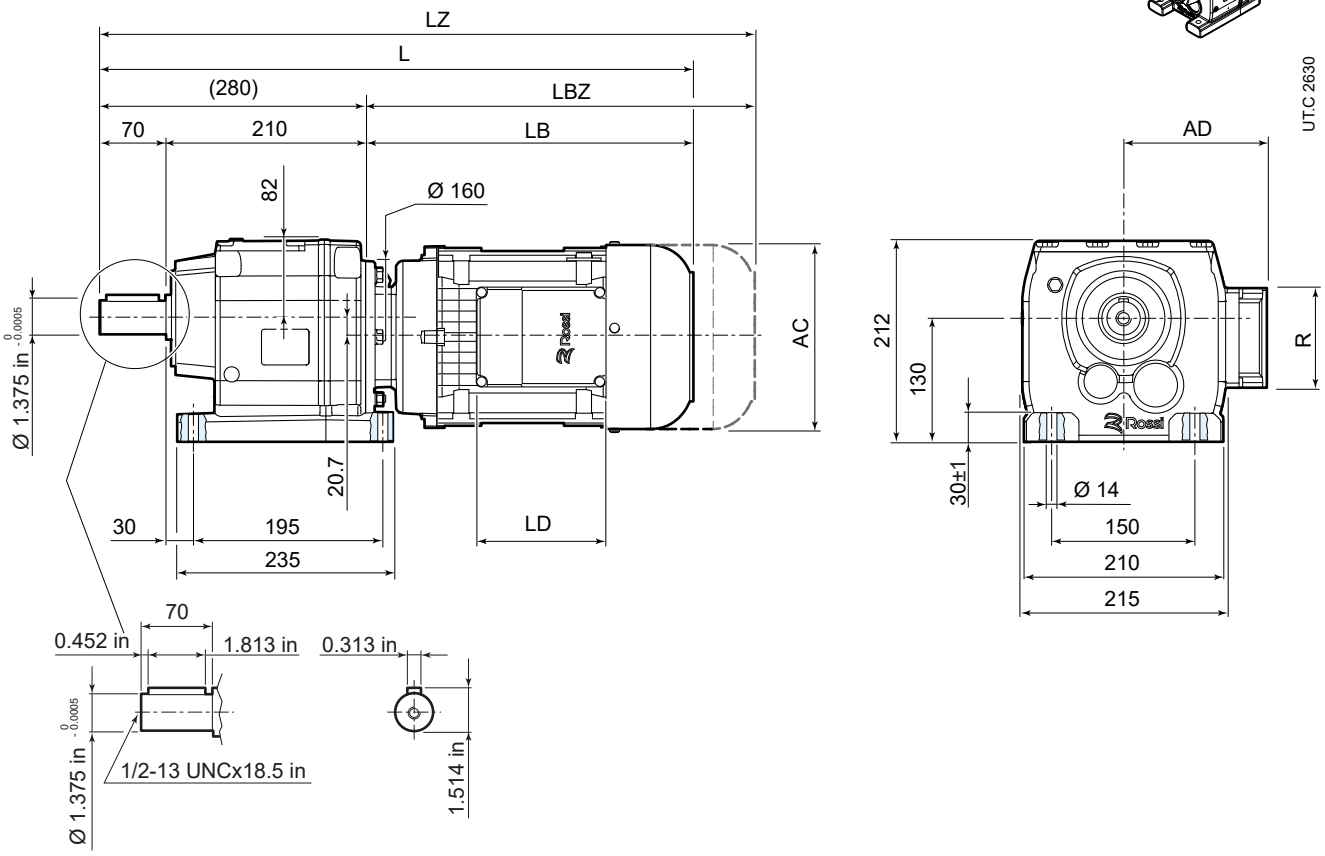

97 83 274

	63	71	80	90S [2]	90L	100	112	132S	132M
AC	123	138	156	176	176	194	218	257	257
AD	95	112	121	141	141	151	163	194	194
LB	205	231	260	283	313	345	383	439	499
LBZ	260	293	329	362	392	440	482	547	607
L [1]	485	511	540	563	593	625	663	719	779
LZ [1]	540	573	609	642	672	720	762	827	887
LD	103	103	103	136	136	136	136	190	190
R	86	86	86	106	106	106	106	148	148

[1] See also pages 89, 90.
[2] The motor protrudes the gear reducer foot mounting surface.

iC 67...FA

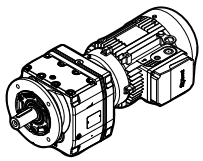

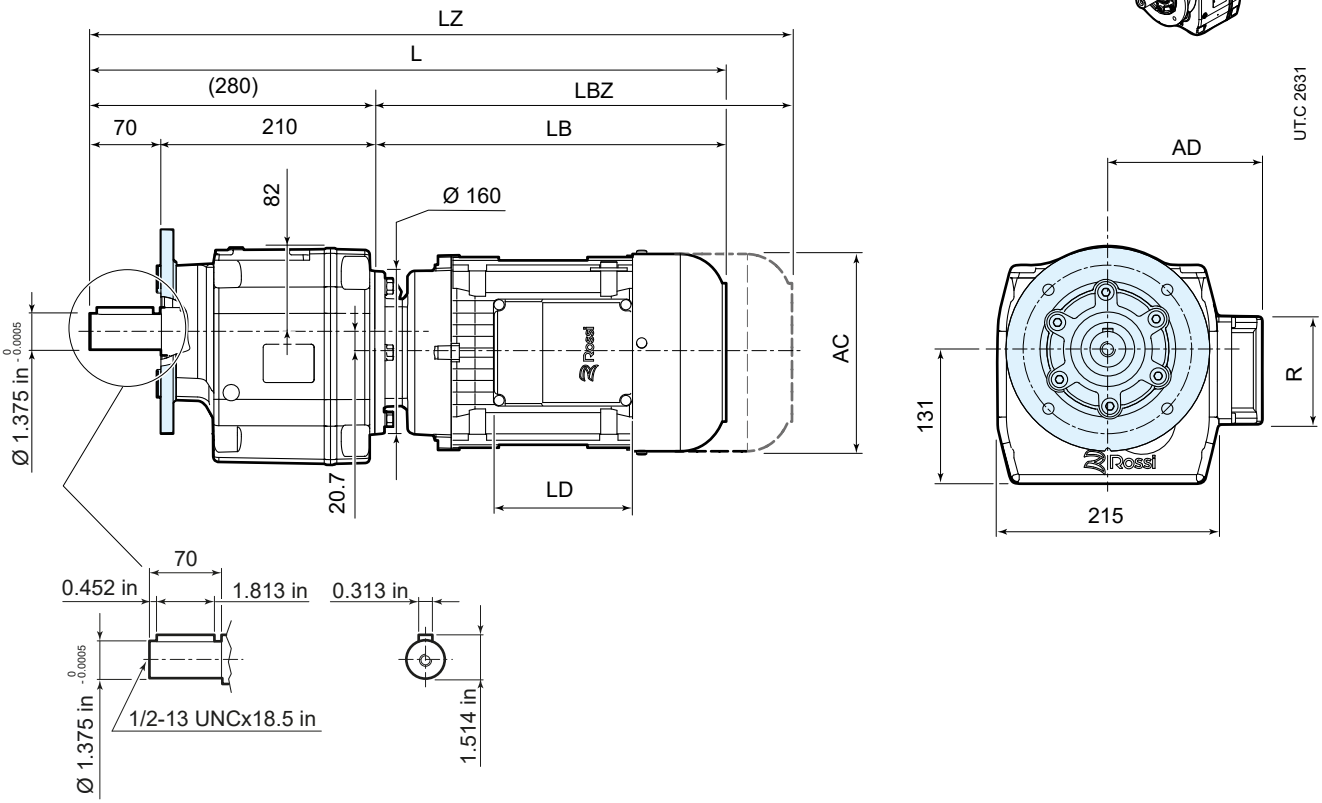

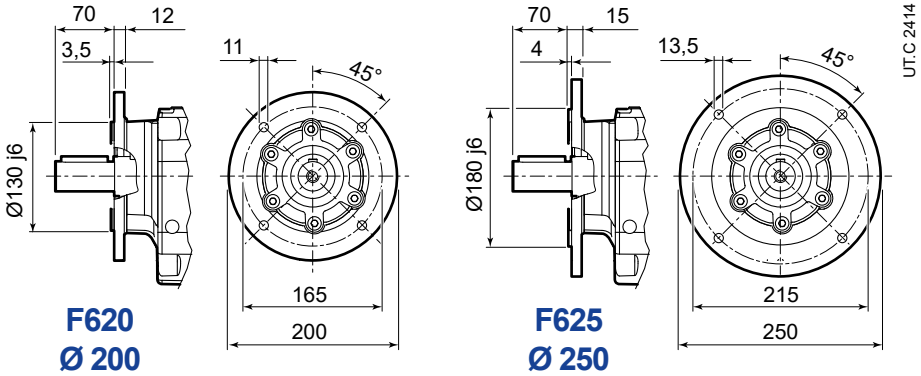

97 83 274

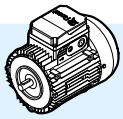

	63	71	80	90S	90L	100	112	132S	132M
AC	123	138	156	176	176	194	218	257	257
AD	95	112	121	141	141	151	163	194	194
LB	205	231	260	283	313	345	383	439	499
LBZ	260	293	329	362	392	440	482	547	607
L [1)]	485	511	540	563	593	625	663	719	779
LZ [1)]	540	573	609	642	672	720	762	827	887
LD	103	103	103	136	136	136	136	190	190
R	86	86	86	106	106	106	106	148	148

[1)] See also pages 89, 90.

10.6

iC 77...PA

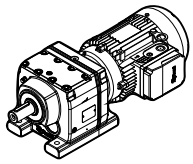

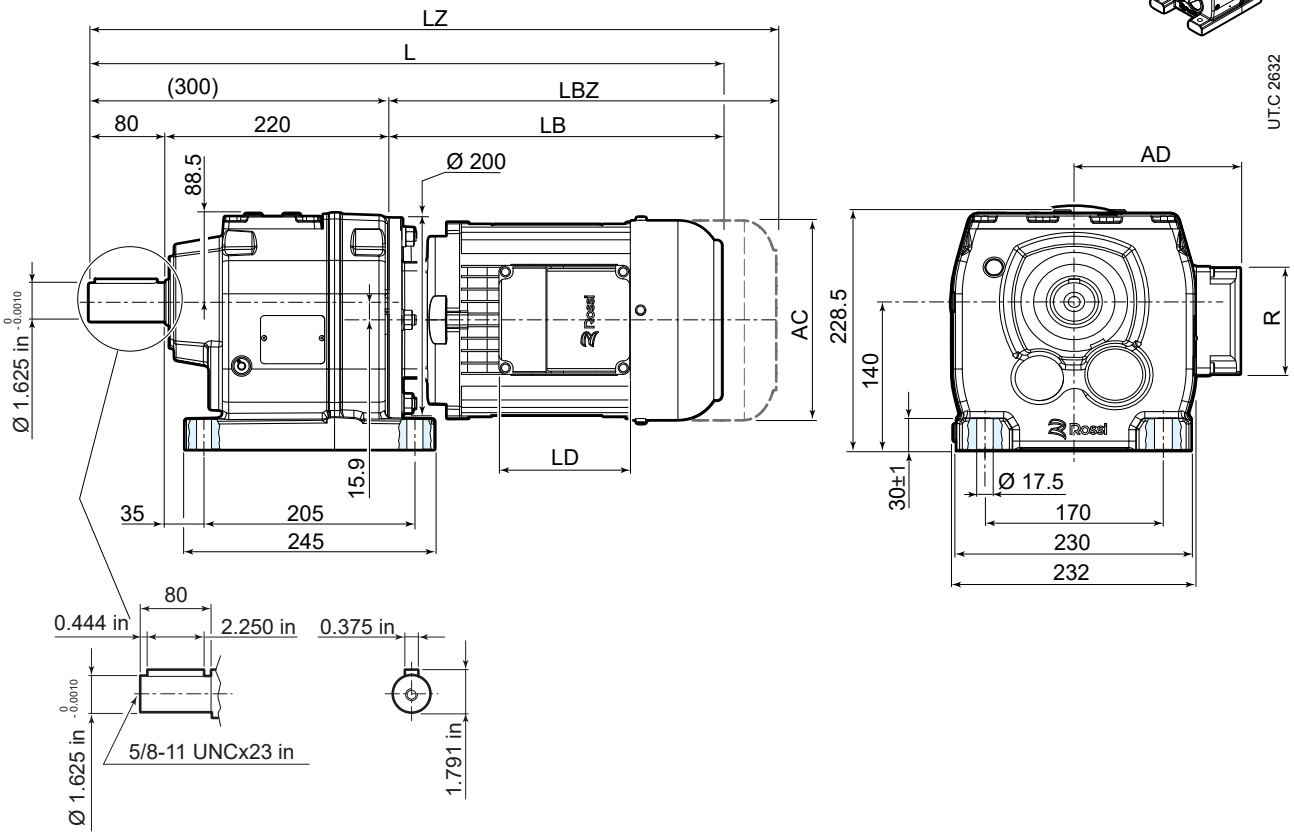

97 83 274

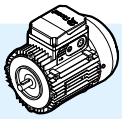

	63	71	80	90S [2]	90L	100	112	132S	132M
AC	123	138	156	176	176	194	218	257	257
AD	95	112	121	141	141	151	163	194	194
LB	199	225	254	276	306	339	377	433	493
LBZ	254	287	323	355	385	434	476	541	601
L [1]	499	525	554	576	606	639	677	733	793
LZ [1]	554	587	623	655	685	734	776	841	901
LD	103	103	103	136	136	136	136	190	190
R	86	86	86	106	106	106	106	148	148

[1] See also pages 89, 90.
[2] The motor protrudes the gear reducer foot mounting surface.

iC 77...FA

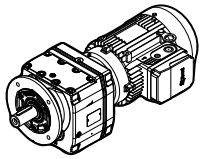

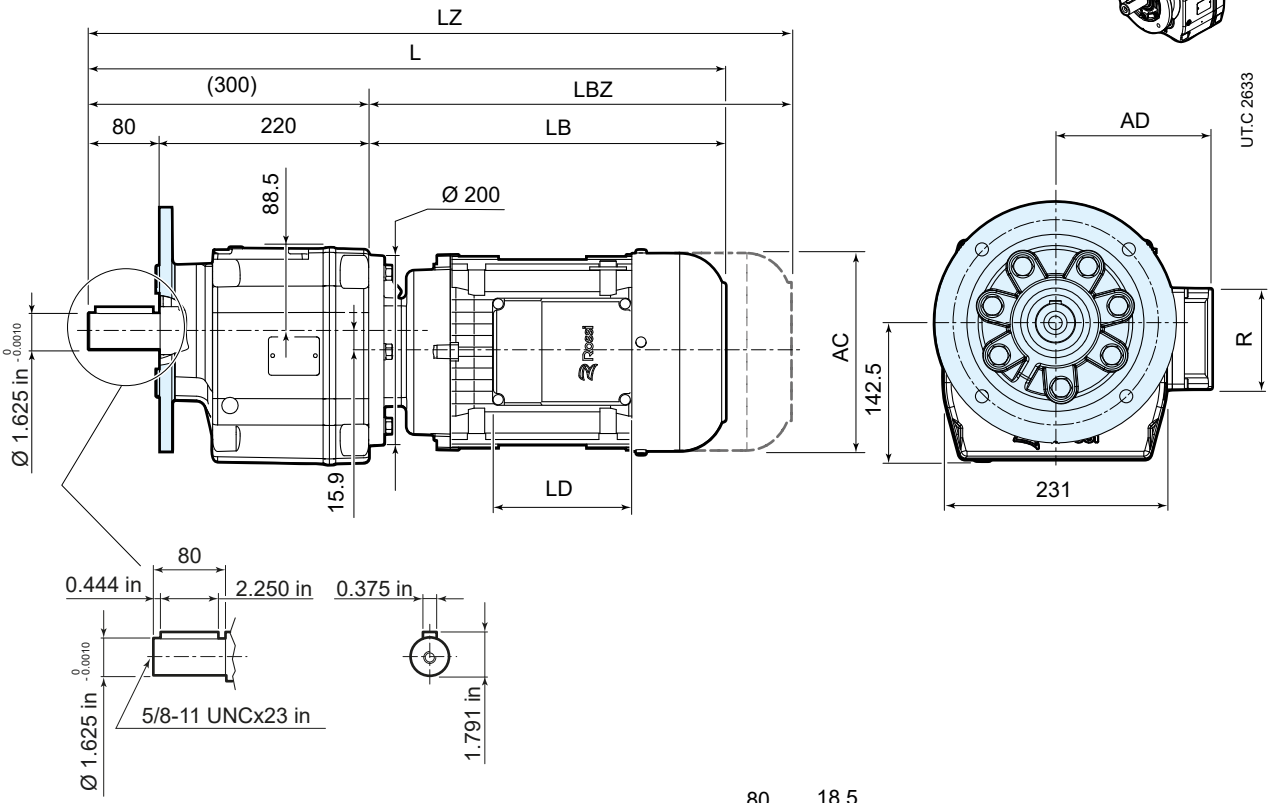

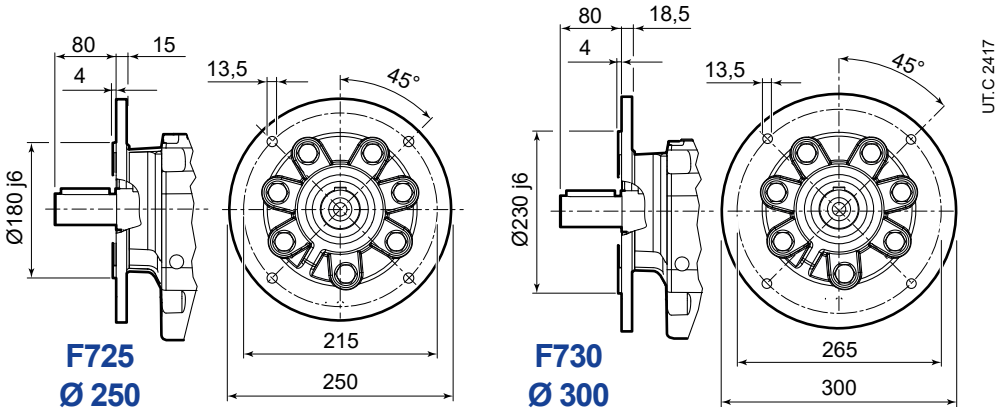

97 83 274

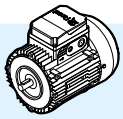	63	71	80	90S	90L	100	112	132S	132M
AC	123	138	156	176	176	194	218	257	257
AD	95	112	121	141	141	151	163	194	194
LB	199	225	254	276	306	339	377	433	493
LBZ	254	287	323	355	385	434	476	541	601
L [1]	499	525	554	576	606	639	677	733	793
LZ [1]	554	587	623	655	685	734	776	841	901
LD	103	103	103	136	136	136	136	190	190
R	86	86	86	106	106	106	106	148	148

[1] See also pages 89, 90.

10.7

iC 87...PA

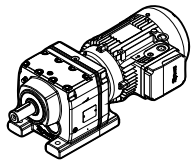

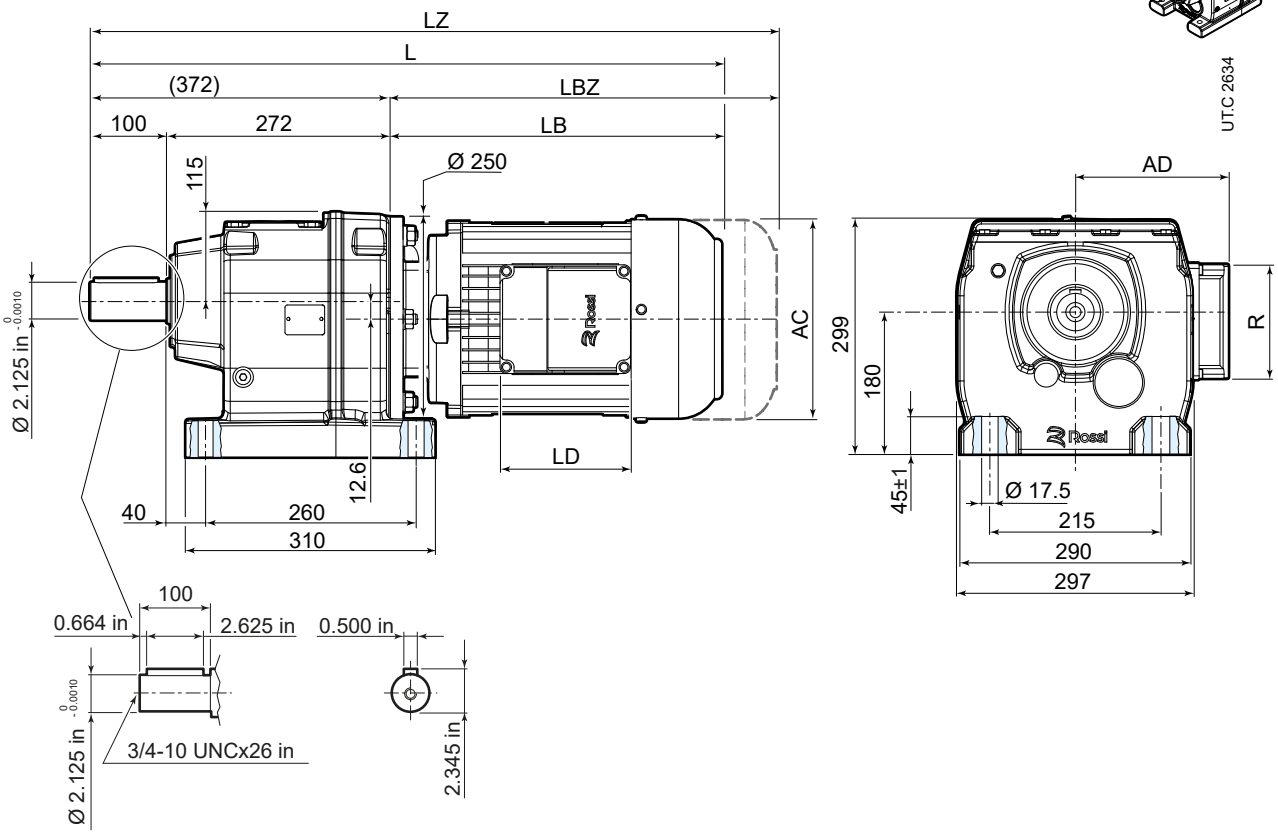

97 83 274

	80	90S	90L	100	112	132S	132M
AC	156	176	176	194	218	257	257
AD	121	141	141	151	163	194	194
LB	249	272	302	334	372	428	488
LBZ	318	351	381	429	471	536	596
L [1]	621	644	674	706	744	800	860
LZ [1]	690	723	753	801	843	908	968
LD	103	136	136	136	136	190	190
R	86	106	106	106	106	148	148

[1] See also pages 89, 90.

iC 87...FA

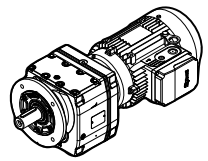

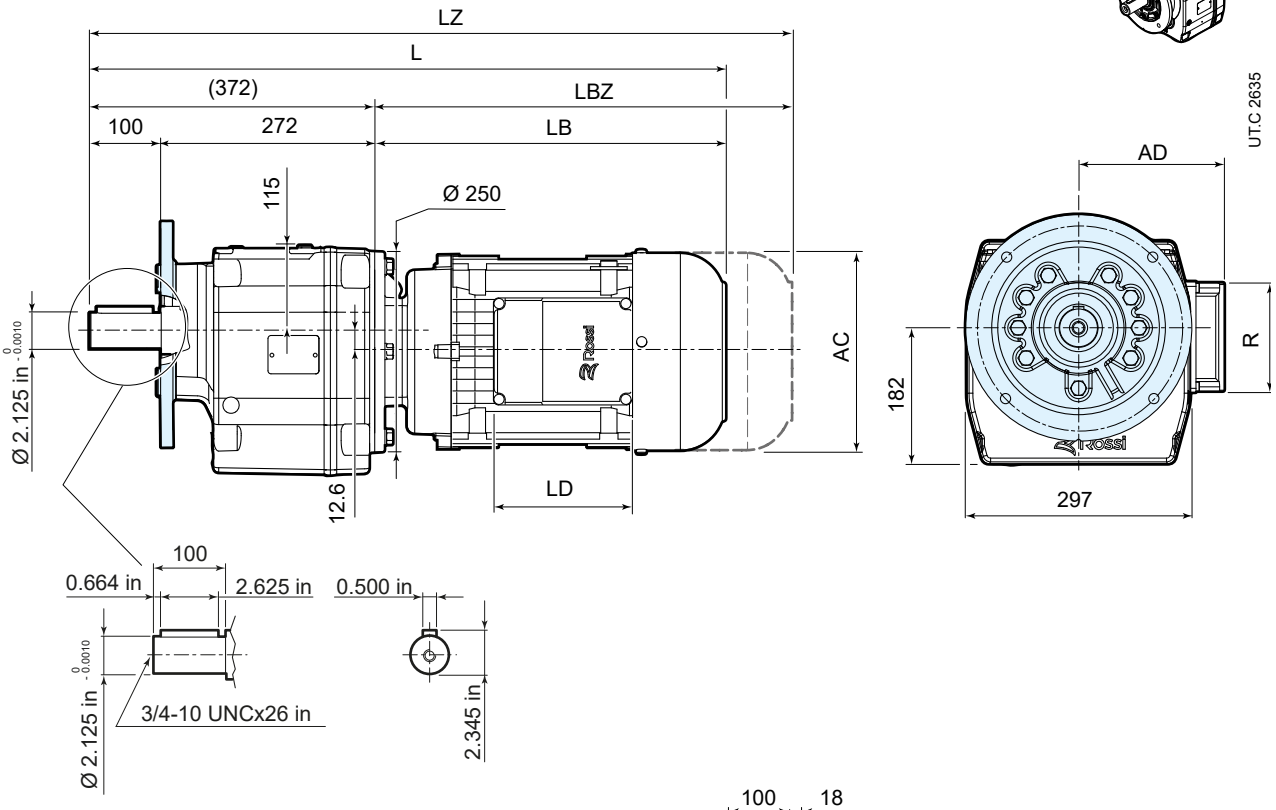

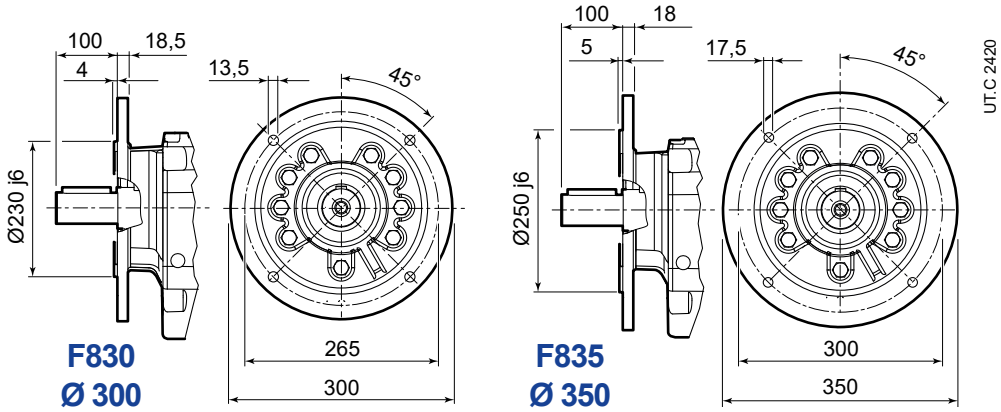

F830
Ø 300

F835
Ø 350

97 83 274

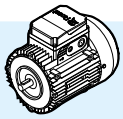

	80	90S	90L	100	112	132S	132M
AC	156	176	176	194	218	257	257
AD	121	141	141	151	163	194	194
LB	249	272	302	334	372	428	488
LBZ	318	351	381	429	471	536	596
L [1]	621	644	674	706	744	800	860
LZ [1]	690	723	753	801	843	908	968
LD	103	136	136	136	136	190	190
R	86	106	106	106	106	148	148

[1] See also pages 89, 90.

10.8

iC 97...PA

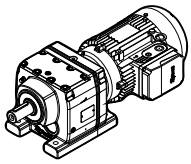

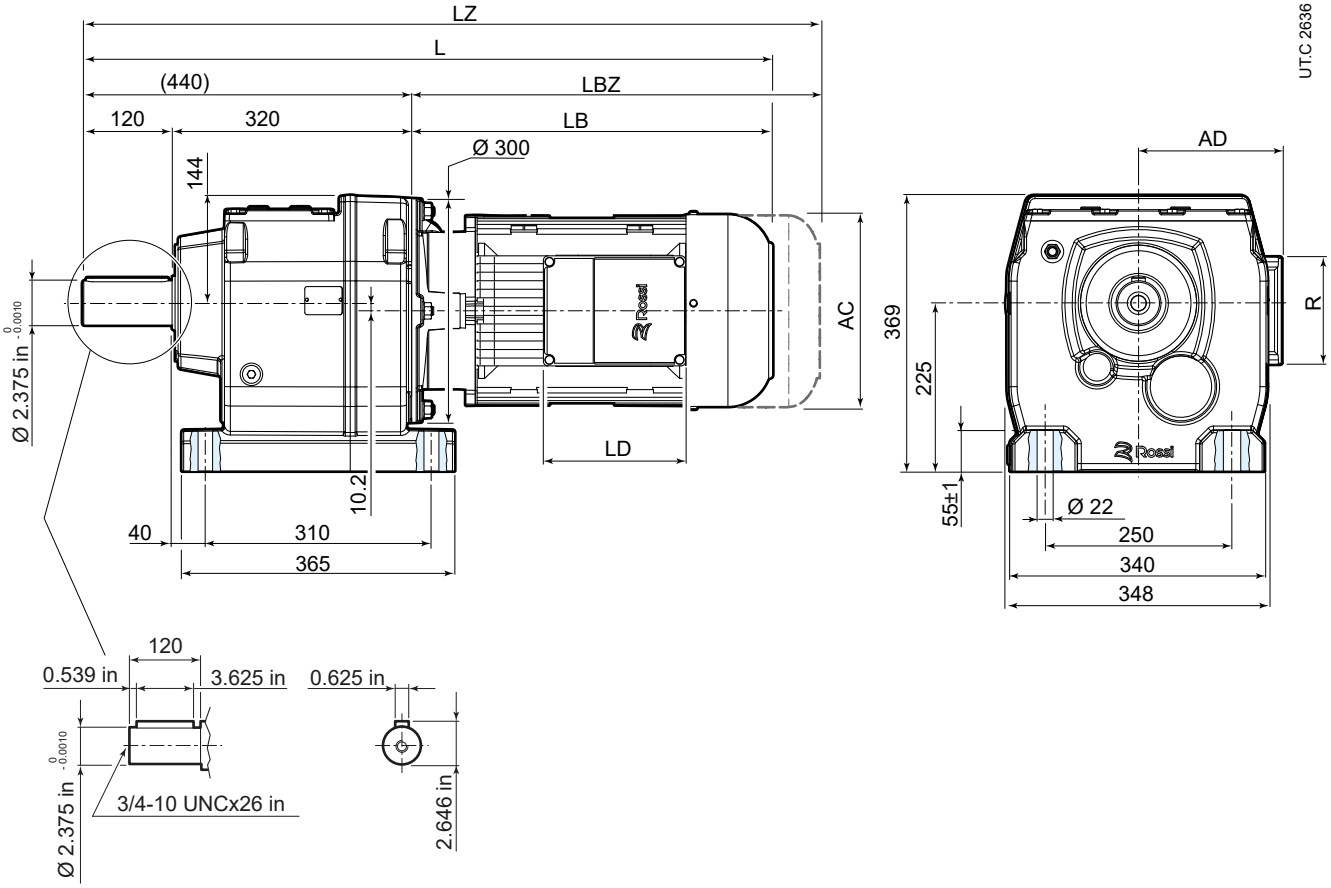

97 83 274

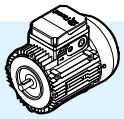

	80	90S	90L	100	112	132S	132M
AC	156	176	176	194	218	257	257
AD	121	141	141	151	163	194	194
LB	241	264	294	327	364	423	483
LBZ	310	343	373	422	463	531	591
L [1]	681	704	734	767	804	863	923
LZ [1]	750	783	813	862	903	971	1031
LD	103	136	136	136	136	190	190
R	86	106	106	106	106	148	148

[1] See also pages 89, 90.

iC 97...FA

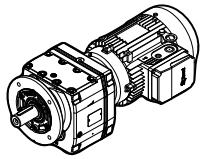

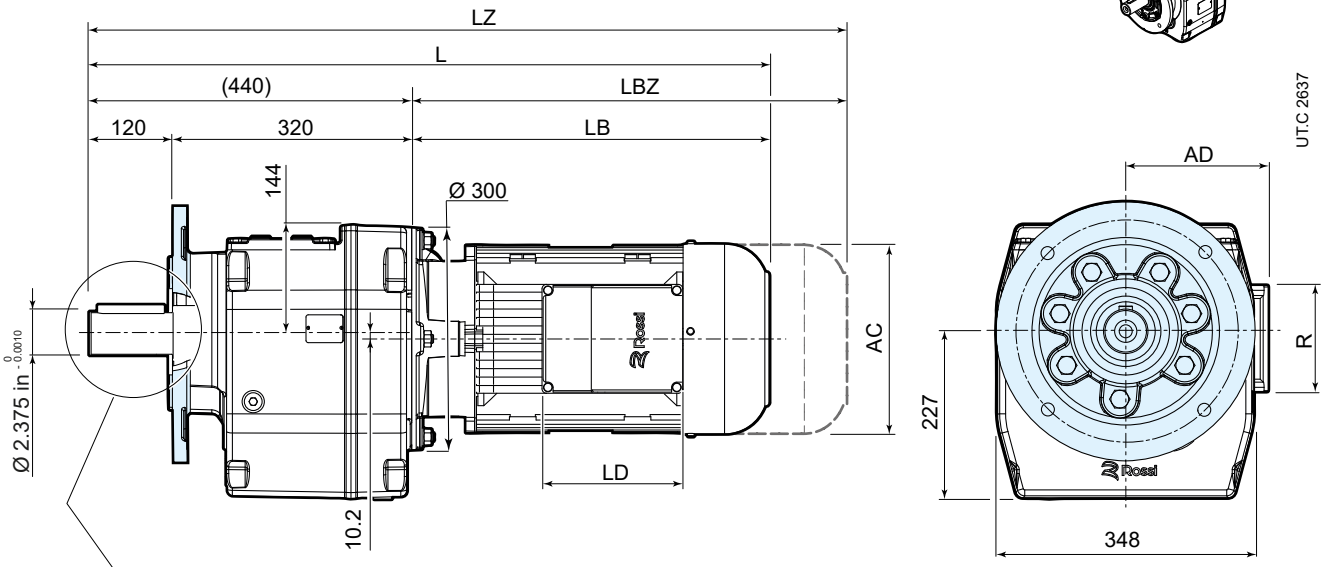

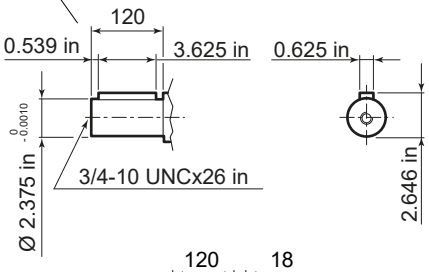

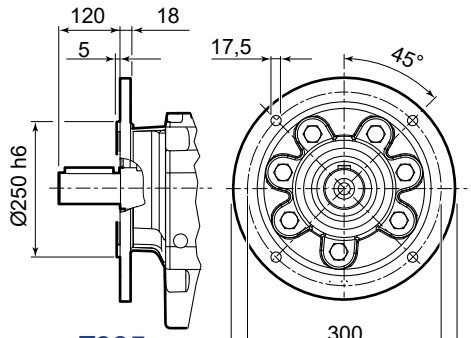

F935
Ø 350

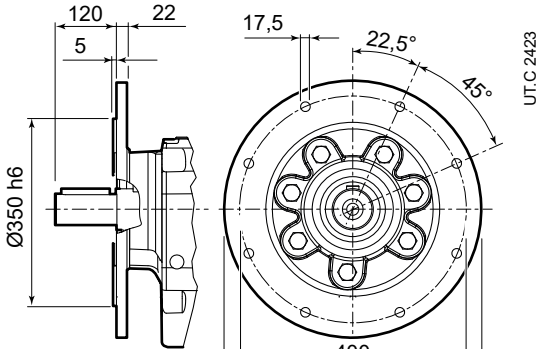

F945
Ø 450

97 83 274

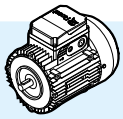

	80	90S	90L	100	112	132S	132M
AC	156	176	176	194	218	257	257
AD	121	141	141	151	163	194	194
LB	241	264	294	327	364	423	483
LBZ	310	343	373	422	463	531	591
L [1)]	681	704	734	767	804	863	923
LZ [1)]	750	783	813	862	903	971	1031
LD	103	136	136	136	136	190	190
R	86	106	106	106	106	148	148

[1)] See also pages 89, 90.

11

Bevel helical Selection tables - iO

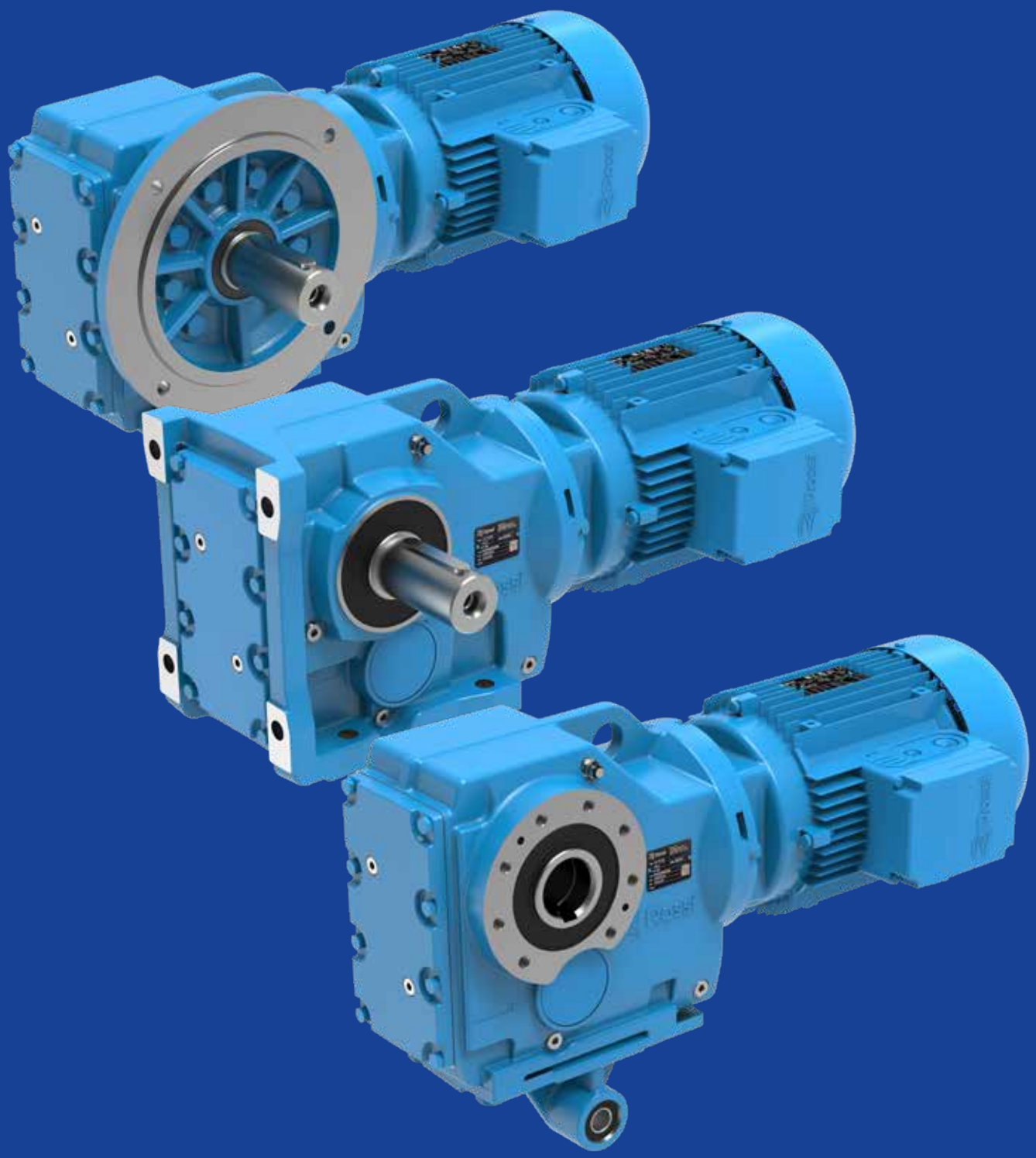

Section contents

11.1 Possible geometrical combinations 162

11.1.1 General 162

11.1.2 Key 162

11.2 Geometrical coupling tables 163

11.3 Selection tables [hp] 170

11.1

Possible geometrical combinations

11.1.1 General

The tables in the following pages show the geometrical coupling possibilities with HB 4 poles motors, according to train of gears (2 or 3 stages) and transmission ratio.
Also the low speed shaft rotation speed n_2, calculated according to a nominal input speed equal to n_1 = 1700 rpm, are shown.
The values of the nominal torque at the low speed shaft T_{N2} and of the permissible radial load F_{r2} acting on the center line are also referred to this speed.

At the time of selection, it is necessary to evaluate the actual operating conditions in relation to the actual power of the applied motor as indicated in ch. 6.

11.1.2 Key

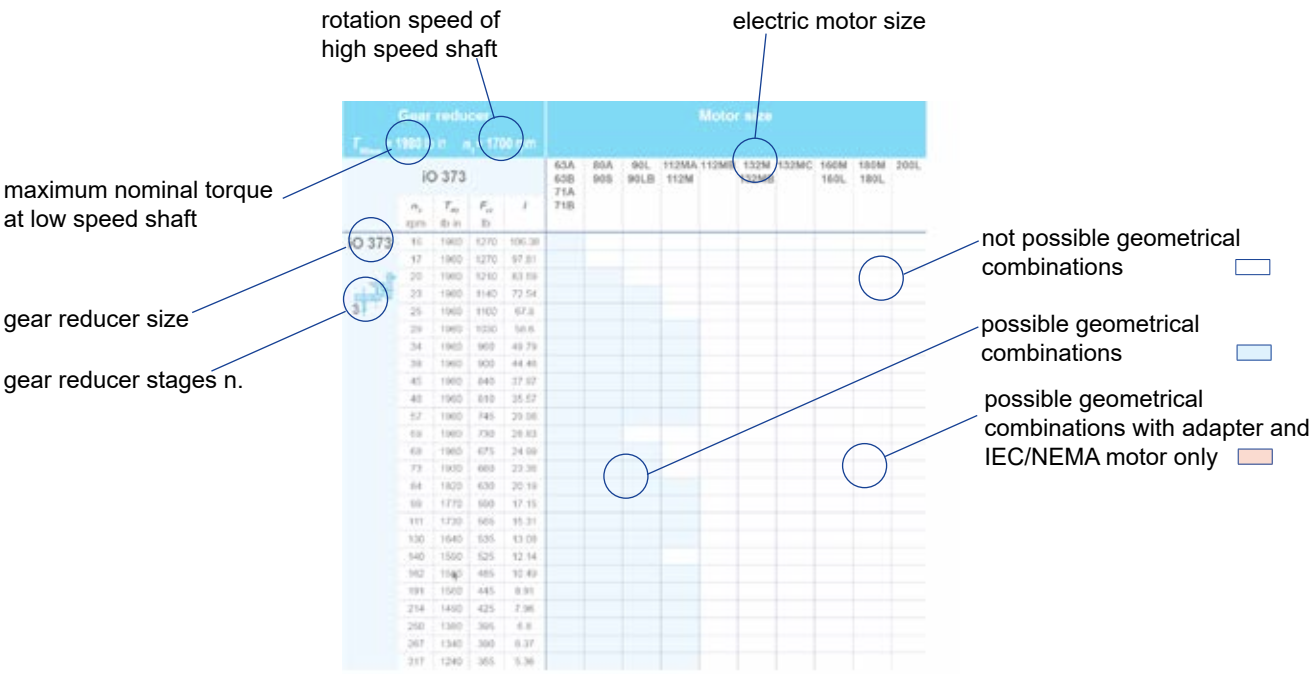

where

- n_2 low speed shaft rotation speed
- T_{N2} nominal torque at low speed shaft
- F_{r2} permissible radial load acting on center line of low speed shaft (at speed n_2 and with torque T_{N2} indicated in the table - valid only for foot mounted gearmotor design)
- i transmission ratio

Gear reducer T_{N2max} = 1980 lb in n_1 = 1700 rpm					Motor size									
iO 373					63A 63B 71A 71B	80A 90S	90L 90LB	112MA 112M	112MB	132M 132MB	132MC	160M 160L	180M 180L	200L
	n_2 rpm	T_{N2} lb in	F_{r2} lb	i										
iO 373 3	16	1980	1270	106.38										
	17	1980	1270	97.81										
	20	1980	1210	83.69										
	23	1980	1140	72.54										
	25	1980	1100	67.8										
	29	1980	1030	58.6										
	34	1980	960	49.79										
	38	1980	900	44.46										
	45	1980	840	37.97										
	48	1980	810	35.57										
	57	1980	745	29.96										
	59	1980	730	28.83										
	68	1980	675	24.99										
	73	1930	660	23.36										
	84	1820	630	20.19										
	99	1770	590	17.15										
	111	1730	565	15.31										
	130	1640	535	13.08										
	140	1590	525	12.14										
	162	1590	485	10.49										
	191	1560	445	8.91										
	214	1490	425	7.96										
	250	1380	395	6.8										
	267	1340	390	6.37										
	317	1240	365	5.36										

Gear reducer T_{N2max} = 3980 lb in n_1 = 1700 rpm					Motor size									
iO 473					63A 63B 71A 71B	80A 90S	90L 90LB	112MA 112M	112MB	132M 132MB	132MC	160M 160L	180M 180L	200L
	n_2 rpm	T_{N2} lb in	F_{r2} lb	i										
iO 473	13	3980	1330	131.87 (1)										
	14	3980	1330	121.48 (1)										
	16	3980	1330	104.37										
	19	3980	1330	90.86										
3	20	3980	1330	85.12 (1)										
	23	3980	1330	75.2 (1)										
	24	3980	1330	69.84										
	27	3980	1330	63.3 (1)										
	30	3980	1330	56.83										
	35	3980	1330	48.95 (1)										
	37	3980	1330	46.03 (1)										
	43	3980	1310	39.61										
	48	3900	1240	35.39										
	54	3980	1160	31.3										
	58	3980	1120	29.32										
	66	3980	1050	25.91										
	71	3980	1000	24.06										
	78	3870	950	21.81										
	87	3740	890	19.58										
	101	3550	850	16.86										
	107	3480	820	15.86										
	125	3310	780	13.65										
	139	3190	745	12.19										
	144	2480	820	11.77										
	161	2480	775	10.56										
	187	2480	715	9.1										
	199	2390	705	8.56										
	231	2210	685	7.36										
	258	2120	660	6.58										
	293	2040	635	5.81										

(1) Finite transmission ratio *i*

Gear reducer T_{N2max} = 5930 lb in n_1 = 1700 rpm					Motor size									
iO 573					63A 63B 71A 71B	80A 90S	90L 90LB	112MA 112M	112MB	132M 132MB	132MC	160M 160L	180M 180L	200L
	n_2 rpm	T_{N2} lb in	F_{r2} lb	i										
iO 573	9,6	670	7630	145,14 (1)										
	11	670	7630	123,85										
	13	670	7630	108,29										
	14	670	7630	102,88 (1)										
	16	670	7630	90,26 (1)										
	18	670	7630	76,56 (1)										
	20	670	7630	69,12										
	23	670	7630	60,81 (1)										
	24	670	7630	57,42 (1)										
	29	670	7630	48,89										
	32	670	7630	44,43										
	36	670	7630	38,49										
	39	670	7630	35,7										
	46	670	7300	30,28										
	51	670	6930	27,34										
	58	670	6480	24,05										
	62	670	6280	22,71										
	72	650	5910	19,34										
	80	615	5740	17,57										
	92	600	5430	15,22										
	106	580	5190	13,25										
	117	460	5150	11,92										
	124	460	4990	11,26										
	146	450	4650	9,59										
	161	430	4520	8,71										
	185	400	4360	7,55										
	213	375	4180	6,57										

(1) Finite transmission ratio *i*

Gear reducer T_{N2max} = 8070 lb in n_1 = 1700 rpm					Motor size									
iO 673	n_2 rpm	T_{N2} lb in	F_{r2} lb	i	63A 63B 71A 71B	80A 90S	90L 90LB	112MA 112M	112MB	132M 132MB	132MC	160M 160L	180M 180L	200L
iO 673	12	8070	2320	144.79 (1)										
	14	8030	2320	123.54										
	16	8000	2320	108.03										
	17	7990	2320	102.62										
3	19	7950	2320	90.04										
	22	7910	2320	76.37										
	25	7890	2320	68.95										
	28	7860	2320	60.66										
	30	7840	2320	57.28										
	35	7800	2320	48.77										
	38	7780	2320	44.32										
	44	7740	2360	38.39										
	48	7730	2320	35.62										
	56	7690	2320	30.22										
	62	7660	2320	27.28										
	71	7630	2360	24										
	75	7510	2390	22.66										
	88	6990	2430	19.3										
	97	6690	2470	17.54										
	112	6240	2530	15.19										
	129	5930	2560	13.22										
	136	4690	2570	12.48										
	160	4430	2460	10.63										
	176	4250	2390	9.66										
	203	3890	2320	8.37										
	234	3720	2230	7.28										

Gear reducer T_{N2max} = 15500 lb in n_1 = 1700 rpm					Motor size									
iO 773	n_2 rpm	T_{N2} lb in	F_{r2} lb	i	63A 63B 71A 71B	80A 90S	90L 90LB	112MA 112M	112MB	132M 132MB	132MC	160M 160L	180M 180L	200L
iO 773	8.8	14200	3610	192.18										
	9.5	14200	3610	179.37										
	11	15500	3460	154.02										
	13	15500	3460	135.28										
3	13	15500	3460	128.52										
	15	15500	3460	113.56										
	18	15500	3460	97.05										
	19	15500	3460	88.97										
	22	15500	3460	78.07										
	23	15500	3460	73.99										
	26	15500	3460	64.75										
	29	15500	3460	58.34										
	33	15500	3460	51.18										
	38	15500	3460	45.16										
	42	15500	3460	40.04										
	44	15000	3530	38.39										
	48	15500	3460	35.2										
	55	15500	3460	30.89										
	58	15500	3460	29.27										
	66	15500	3460	25.62										
	74	15400	3460	23.08										
	84	15000	3460	20.25										
	95	14100	3330	17.87										
	107	13300	3210	15.84										
	126	12300	3060	13.52										
	138	8850	3140	12.36										
	157	8760	2990	10.84										
	178	8320	2890	9.56										
	200	7880	2810	8.48										
	235	7260	2710	7.24										

Gear reducer T_{N2max} = 26600 lb in n_1 = 1700 rpm					Motor size									
iO 873	n_2 rpm	T_{N2} lb in	F_{r2} lb	i	63A 63B 71A 71B	80A 90S	90L 90LB	112MA 112M	112MB	132M 132MB	132MC	160M 160L	180M 180L	200L
iO 873 3	8.6	26600	6130	197.37										
	9.8	26600	6130	174.19										
	10	26600	6130	164.34 (1)										
	12	26600	6130	147.32 (1)										
	13	26600	6130	126.91 (1)										
	15	26600	6130	115.82										
	17	26600	6130	102.71 (1)										
	20	26600	6130	86.34										
	21	26600	5970	79.34										
	24	26600	5670	70.46										
	27	26600	5410	63 (1)										
	30	26600	5160	56.64										
	35	26600	4840	49.16										
	39	25700	4700	44.02										
	47	24800	4400	36.52 (1)										
	54	26600	3930	31.39										
	61	25700	3790	27.88										
	68	24800	3680	24.92										
	76	22700	3680	22.41										
	87	22700	3440	19.45										
	98	21500	3350	17.42										
	106	16000	3290	16										
	118	20900	3150	14.45										
	135	19800	3030	12.56										
	152	14700	3080	11.17										
	170	14000	2920	10										
	205	12900	2780	8.29										
	236	12100	2720	7.21										

(1) Finite transmission ratio *i*

Gear reducer T_{N2max} = 43100 lb in n_1 = 1700 rpm					Motor size									
iO 973	n_2 rpm	T_{N2} lb in	F_{r2} lb	i	63A 63B 71A 71B	80A 90S	90L 90LB	112MA 112M	112MB	132M 132MB	132MC	160M 160L	180M 180L	200L
iO 973	9.7	43100	8990	176.05 (1)										
	11	43100	8990	153.21 (1)										
	12	43100	8990	140.28										
	14	43100	8990	123.93 (1)										
3	16	43100	8710	105.13										
	18	43100	8420	96.8										
	20	43100	8030	86.52										
	22	43100	7670	77.89 (1)										
	24	43100	7350	70.54										
	27	43100	6970	62.55										
	30	43100	6660	56.55										
	35	43100	6180	47.93 (1)										
	41	43100	5800	41.87										
	44	43100	5560	38.3										
	50	43100	5260	34.23										
	55	43100	5000	30.82										
	61	43100	4750	27.91										
	69	43100	4460	24.75										
	76	43100	4230	22.37										
	90	43100	3860	18.96										
	103	40600	3580	16.56										
	123	38100	3220	13.85										
	142	34700	3260	11.99										
	163	25500	3320	10.41										
	195	23500	3200	8.71										

(1) Finite transmission ratio *i*

11.3

Selection tables [hp]

n_2 rpm	T_2 lb in	i	F_{r2} lb	SF	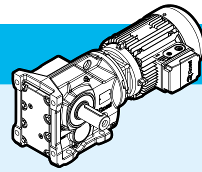 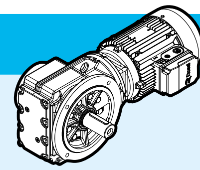		foot HB	foot HBZ	flange HB	flange HBZ	p.
P_1 = 0.16 hp											
7.7	1300	144.79 [1]	2920	6.3	**iO 673 – HB2 63 B 6 B16B**	3	76	80	87	91	205
7.7	1310	145.14 [1]	2200	4.5	**iO 573 – HB2 63 B 6 B16B**	3	66	70	81	85	202
9	1120	123.85	2210	5.3							
10	975	108.29	2220	6.1							
11	925	102.88 [1]	2230	6.4							
12	815	90.26 [1]	2230	7.3							
15	690	76.56 [1]	2240	8.6							
12	865	145.14 [1]	2230	6.8	**iO 573 – HB2 63 A 4 B16B**	3	65	68	79	83	
14	740	123.85	2240	8							
16	645	108.29	2240	9.2							
16	615	102.88 [1]	2250	9.7							
19	540	90.26 [1]	2250	11							
8.5	1190	131.87 [1]	1810	3.4	**iO 473 – HB2 63 B 6 B16B**	3	50	54	56	60	199
9.2	1090	121.48 [1]	1820	3.6							
11	940	104.37	1830	4.2							
13	785	131.87 [1]	1840	5.1	**iO 473 – HB2 63 A 4 B16B**	3	49	53	55	59	
14	725	121.48 [1]	1840	5.5							
11	960	106.38	1350	2.1	**iO 373 – HB2 63 B 6 B12B**	3	41	45	46	49	196
11	880	97.81	1370	2.3							
13	755	83.69	1400	2.6							
15	655	72.54	1430	3							
16	635	106.38	1430	3.1	**iO 373 – HB2 63 A 4 B12B**	3	40	44	44	48	
17	585	97.81	1440	3.4							
20	500	83.69	1460	4							
23	435	72.54	1450	4.6							
25	405	67.8	1420	4.9							
P_1 = 0.25 hp											
12	1360	144.79 [1]	2920	5.9	**iO 673 – HB2 63 B 4 B16B**	3	76	80	87	91	205
14	1160	123.54	2920	6.9							
16	1010	108.03	2920	7.9							
7.7	2040	144.79 [1]	2920	4	**iO 673 – HB2 71 A 6 B16B**	3	79	85	91	96	
9.1	1740	123.54	2920	4.7							
10	1520	108.03	2920	5.4							
11	1440	102.62	2920	5.7							

[1] Finite transmission ratio *i*

P_1 = 0.25 hp

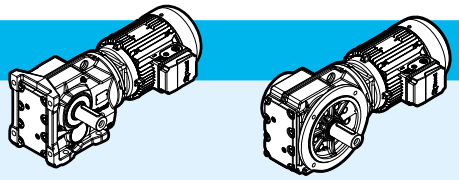

n_2 rpm	T_2 lb in	i	F_{r2} lb	SF			lb foot HB	lb foot HBZ	lb flange HB	lb flange HBZ	p.
12	1360	145.14 (1)	2200	4.4	**iO 573 – HB2 63 B 4 B16B**	3	66	70	81	85	202
14	1160	123.85	2210	5.1							
16	1020	108.29	2220	5.8							
16	965	102.88 (1)	2220	6.1							
19	845	90.26 (1)	2230	7							
22	720	76.56 (1)	2240	8.3							
7.7	2040	145.14 (1)	2130	2.9	**iO 573 – HB2 71 A 6 B16B**	3	69	75	84	90	
9	1740	123.85	2160	3.4							
10	1520	108.29	2180	3.9							
11	1450	102.88 (1)	2180	4.1							
12	1270	90.26 (1)	2200	4.7							
13	1240	131.87 (1)	1810	3.2	**iO 473 – HB2 63 B 4 B16B**	3	50	54	56	60	199
14	1140	121.48 (1)	1820	3.5							
16	980	104.37	1830	4.1							
18	850	90.86	1840	4.7							
20	800	85.12 (1)	1840	5							
8.5	1860	131.87 (1)	1720	2.1	**iO 473 – HB2 71 A 6 B16B**	3	53	59	59	65	
9.2	1710	121.48 (1)	1740	2.3							
11	1470	104.37	1780	2.7							
12	1280	90.86	1800	3.1							
13	1200	85.12 (1)	1810	3.3							
16	1000	106.38	1350	2	**iO 373 – HB2 63 B 4 B12B**	3	41	45	46	49	196
17	915	97.81	1370	2.2							
20	785	83.69	1400	2.5							
23	680	72.54	1390	2.9							
25	635	67.8	1370	3.1							
29	550	58.6	1310	3.6							
34	465	49.79	1260	4.2							
38	415	44.46	1220	4.8							
44	355	37.97	1160	5.6							
11	1500	106.38	1220	1.3	**iO 373 – HB2 71 A 6 B12B**	3	**44**	**50**	**49**	**55**	
11	1380	97.81	1250	1.45							
13	1180	83.69	1290	1.7							
15	1020	72.54	1330	1.95							

P_1 = 0.33 hp

12	1760	145.14 (1)	2160	3.4	**iO 573 – HB2 71 A 4 B16B**	3	68	74	83	89	202
14	1500	123.85	2180	4							
16	1310	108.29	2200	4.5							
17	1240	102.88 (1)	2200	4.8							
19	1090	90.26 (1)	2210	5.4							
22	925	76.56 (1)	2230	6.4							

(1) Finite transmission ratio *i*

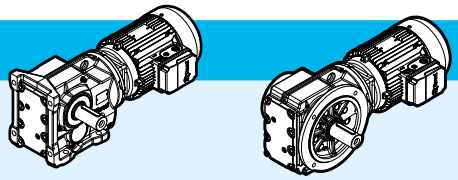

P_1 = 0.33 hp

n_2 rpm	T_2 lb in	i	F_{r2} lb	SF			lb foot HB	lb foot HBZ	lb flange HB	lb flange HBZ	p.
8.5	2450	131.87 (1)	1620	1.65	**iO 473 – HB2 71 B 6 B16B**	3	55	61	61	67	199
9.2	2260	121.48 (1)	1660	1.75							
11	1940	104.37	1720	2.1							
12	1690	90.86	1750	2.4							
13	1580	85.12 (1)	1770	2.5							
13	1590	131.87 (1)	1770	2.5	**iO 473 – HB2 71 A 4 B16B**	3	53	59	59	64	
14	1470	121.48 (1)	1780	2.7							
16	1260	104.37	1800	3.2							
19	1100	90.86	1820	3.6							
20	1030	85.12 (1)	1820	3.9							
13	1550	83.69	1210	1.3	**iO 373 – HB2 71 B 6 B12B**	3	46	52	50	56	196
15	1350	72.54	1260	1.45							
17	1260	67.8	1280	1.55							
19	1090	58.6	1320	1.8							
22	925	49.79	1360	2.1							
16	1290	106.38	1280	1.55	**iO 373 – HB2 71 A 4 B12B**	3	44	50	48	54	
18	1180	97.81	1300	1.7							
21	1010	83.69	1340	1.95							
24	875	72.54	1340	2.3							
25	820	67.8	1320	2.4							
29	710	58.6	1270	2.8							
35	600	49.79	1220	3.3							
39	540	44.46	1190	3.7							
45	460	37.97	1140	4.3							
48	430	35.57	1120	4.6							
57	360	29.96	1070	5.5							
60	350	28.83	1060	5.7							

P_1 = 0.5 hp

5.7	5500	197.37	6500	4.8	**iO 873 – HB2 80 A 6 B25C**	3	225	235	240	245	211
6.5	4860	174.19	6510	5.5							
7.3	4300	154.02	4430	3.6	**iO 773 – HB2 80 A 6 B20C**	3	125	135	140	150	208
8.4	3770	135.28	4450	4.1							
8.8	3580	128.52	4460	4.3							
10	3170	113.56	4470	4.9							
9	3520	192.18	4460	4	**iO 773 – HB2 71 B 4 B20B**	3	120	125	140	145	
9.6	3290	179.37	4470	4.3							
11	2820	154.02	4480	5.5							
9.1	3450	123.54	2880	2.4	**iO 673 – HB2 80 A 6 B16C**	3	83	92	95	105	205
10	3010	108.03	2920	2.7							
11	2860	102.62	2920	2.9							
13	2510	90.04	2920	3.3							

(1) Finite transmission ratio *i*

P_1 = 0.5 hp

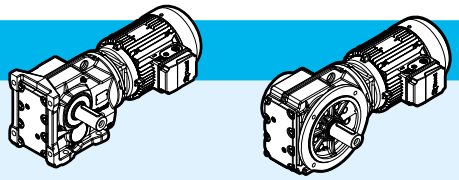

n_2 rpm	T_2 lb in	i	F_{r2} lb	SF			lb foot HB	lb foot HBZ	lb flange HB	lb flange HBZ	p.
12	2650	144.79 (1)	2920	3	iO 673 – HB2 71 B 4 B16B	3	80	86	92	98	205
14	2260	123.54	2920	3.5							
16	1980	108.03	2920	4							
19	1650	90.04	2920	4.8							
23	1400	76.37	2920	5.7							
9.1	3450	123.85	1990	1.7	iO 573 – HB2 80 A 6 B16C	3	73	82	88	97	202
10	3020	108.29	2040	1.95							
11	2870	102.88 (1)	2060	2.1							
13	2520	90.26 (1)	2090	2.4							
15	2140	76.56 (1)	2130	2.8							
16	1930	69.12	2150	3.1							
12	2660	145.14 (1)	2080	2.2	iO 573 – HB2 71 B 4 B16B	3	70	76	85	91	
14	2270	123.85	2120	2.6							
16	1980	108.29	2140	3							
17	1880	102.88 (1)	2150	3.1							
19	1650	90.26 (1)	2170	3.6							
22	1400	76.56 (1)	2190	4.2							
25	1270	69.12	2200	4.7							
11	2910	104.37	1500	1.35	iO 473 – HB2 80 A 6 B16C	3	58	67	64	72	199
12	2530	90.86	1600	1.55							
13	2370	85.12 (1)	1630	1.7							
15	2100	75.2 (1)	1690	1.9							
13	2420	131.87 (1)	1630	1.65	iO 473 – HB2 71 B 4 B16B	3	55	61	61	66	
14	2230	121.48 (1)	1670	1.8							
16	1910	104.37	1720	2.1							
19	1660	90.86	1760	2.4							
20	1560	85.12 (1)	1770	2.6							
23	1380	75.2 (1)	1790	2.9							
25	1280	69.84	1800	3.1							
27	1160	63.3 (1)	1810	3.4							
18	1790	97.81	1160	1.1	iO 373 – HB2 71 B 4 B12B	3	46	51	50	56	196
21	1530	83.69	1220	1.3							
24	1330	72.54	1240	1.5							
25	1240	67.8	1220	1.6							
29	1070	58.6	1190	1.85							
35	910	49.79	1150	2.2							
39	815	44.46	1120	2.4							
45	695	37.97	1080	2.8							
48	650	35.57	1070	3							
57	550	29.96	1020	3.6							
60	530	28.83	1010	3.8							
69	460	24.99	980	4.3							
74	430	23.36	960	4.5							
85	370	20.19	920	4.9							
100	315	17.15	880	5.6							

(1) Finite transmission ratio *i*

P_1 = 0.75 hp

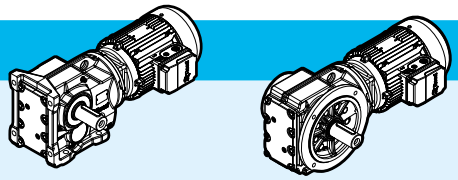

n_2 rpm	T_2 lb in	i	F_{r2} lb	SF			lb foot HB	lb foot HBZ	lb flange HB	lb flange HBZ	p.
5.8	8180	197.37	6470	3.2	**iO 873 – HB3 80 B 6 B25C**	3	235	240	245	255	211
6.5	7220	174.19	6490	3.7							
6.9	6810	164.34 (1)	6490	3.9							
7.7	6110	147.32 (1)	6500	4.3							
7.4	6390	154.02	4310	2.4	**iO 773 – HB3 80 B 6 B20C**	3	130	140	145	155	208
8.4	5610	135.28	4360	2.8							
8.9	5330	128.52	4370	2.9							
10	4710	113.56	4410	3.3							
11	4180	154.02	4430	3.7	**iO 773 – HB2 80 A 4 B20C**	3	125	135	145	150	
13	3680	135.28	4450	4.2							
14	3490	128.52	4460	4.4							
15	3080	113.56	4470	5							
18	2640	97.05	4490	5.9							
9.2	5120	123.54	2690	1.6	**iO 673 – HB3 80 B 6 B16C**	3	90	99	100	110	205
11	4480	108.03	2770	1.85							
11	4260	102.62	2800	1.9							
13	3730	90.04	2850	2.2							
15	3170	76.37	2910	2.6							
14	3360	123.54	2890	2.4	**iO 673 – HB2 80 A 4 B16C**	3	86	94	97	105	
16	2930	108.03	2920	2.7							
19	2450	90.04	2920	3.3							
23	2070	76.37	2920	3.8							
11	4490	108.29	1860	1.3	**iO 573 – HB3 80 B 6 B16C**	3	80	89	95	105	202
11	4270	102.88 (1)	1900	1.4							
13	3740	90.26 (1)	1970	1.6							
15	3170	76.56 (1)	2030	1.85							
16	2870	69.12	2060	2.1							
19	2520	60.81 (1)	2090	2.4							
20	2380	57.42 (1)	2110	2.5							
14	3360	123.85	2000	1.75	**iO 573 – HB2 80 A 4 B16C**	3	76	84	91	99	
16	2940	108.29	2050	2							
17	2790	102.88 (1)	2060	2.1							
19	2450	90.26 (1)	2100	2.4							
23	2080	76.56 (1)	2130	2.9							
25	1880	69.12	2150	3.2							
29	1650	60.81 (1)	2170	3.6							
30	1560	57.42 (1)	2180	3.8							
17	2840	104.37	1520	1.4	**iO 473 – HB2 80 A 4 B16C**	3	60	69	66	75	199
19	2470	90.86	1610	1.6							
20	2310	85.12 (1)	1640	1.7							
23	2040	75.2 (1)	1700	1.95							
25	1900	69.84	1720	2.1							
27	1720	63.3 (1)	1750	2.3							
31	1540	56.83	1770	2.6							

(1) Finite transmission ratio *i*

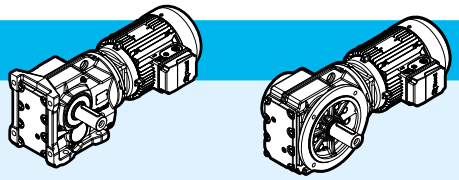

P_1 = 0.75 hp

n_2 rpm	T_2 lb in	i	F_{r2} lb	SF			lb foot HB	lb foot HBZ	lb flange HB	lb flange HBZ	p.
36	1330	48.95 (1)	1790	3	**iO 473 – HB2 80 A 4 B16C**	3	60	69	66	75	199
38	1250	46.03 (1)	1800	3.2							
30	1590	58.6	1060	1.25	**iO 373 – HB2 80 A 4 B12C**	3	51	60	55	64	196
35	1350	49.79	1040	1.45							
39	1210	44.46	1030	1.65							
46	1030	37.97	1000	1.9							
49	965	35.57	990	2.1							
58	815	29.96	960	2.4							
60	785	28.83	950	2.5							
70	680	24.99	920	2.9							
74	635	23.36	910	3							
86	550	20.19	880	3.3							
101	465	17.15	850	3.8							
114	415	15.31	820	4.1							
133	355	13.08	790	4.6							
143	330	12.14	775	4.8							
166	285	10.49	745	5.6							

P_1 = 1 hp

6.7	9460	174.19	6460	2.8	**iO 873 – HB3 100 LA 6 B25D**	3	270	285	285	295	211
7.1	8930	164.34 (1)	6470	3							
7.9	8000	147.32 (1)	6480	3.3							
9.1	6900	126.91 (1)	6490	3.9							
8.8	7150	197.37	6490	3.7	**iO 873 – HB3 90 S 4 B25C**	3	240	250	255	265	
10	6310	174.19	6500	4.2							
11	5950	164.34 (1)	6500	4.5							
12	5340	147.32 (1)	6510	5							
8.6	7350	135.28	4250	2.1	**iO 773 – HB3 100 LA 6 B20D**	3	170	185	185	200	208
9	6980	128.52	4280	2.2							
10	6170	113.56	4330	2.5							
12	5270	97.05	4380	2.9							
13	4830	88.97	4410	3.2							
11	5580	154.02	4370	2.8	**iO 773 – HB3 90 S 4 B20C**	3	140	150	155	165	
13	4900	135.28	4400	3.2							
14	4660	128.52	4420	3.3							
15	4110	113.56	4440	3.8							
18	3520	97.05	4460	4.4							
11	5870	108.03	2590	1.4	**iO 673 – HB3 100 LA 6 B16D**	3	130	140	140	155	205
11	5580	102.62	2640	1.45							
13	4890	90.04	2730	1.65							
15	4150	76.37	2820	1.95							
17	3750	68.95	2860	2.2							
19	3300	60.66	2900	2.4							

(1) Finite transmission ratio *i*

P_1 = 1 hp

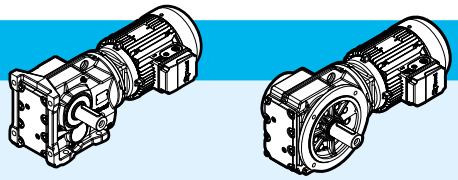

n_2 rpm	T_2 lb in	i	F_{r2} lb	SF			lb foot HB	lb foot HBZ	lb flange HB	lb flange HBZ	p.
20	3110	57.28	2920	2.6	**iO 673 – HB3 100 LA 6 B16D**	3	130	140	140	155	205
24	2650	48.77	2920	3							
26	2410	44.32	2920	3.3							
14	4470	123.54	2790	1.8	**iO 673 – HB3 90 S 4 B16C**	3	100	110	110	120	
16	3910	108.03	2850	2							
17	3720	102.62	2860	2.1							
19	3260	90.04	2900	2.4							
23	2770	76.37	2920	2.9							
25	2500	68.95	2920	3.2							
29	2200	60.66	2920	3.6							
30	2070	57.28	2920	3.8							
13	4900	90.26 (1)	1800	1.2	**iO 573 – HB3 100 LA 6 B16D**	3	120	130	135	145	202
15	4160	76.56 (1)	1930	1.45							
17	3760	69.12	1970	1.6							
19	3300	60.81 (1)	2020	1.8							
20	3120	57.42 (1)	2040	1.9							
24	2660	48.89	2090	2.2							
26	2410	44.43	2110	2.5							
30	2090	38.49	2140	2.8							
32	1940	35.7	2150	3.1							
14	4490	123.85	1890	1.3	**iO 573 – HB3 90 S 4 B16C**	3	90	99	105	115	
16	3920	108.29	1960	1.5							
17	3730	102.88 (1)	1980	1.6							
19	3270	90.26 (1)	2030	1.8							
23	2770	76.56 (1)	2080	2.1							
25	2500	69.12	2100	2.4							
29	2200	60.81 (1)	2130	2.7							
30	2080	57.42 (1)	2140	2.9							
36	1770	48.89	2170	3.3							
39	1610	44.43	2180	3.7							
18	3440	63.3 (1)	1370	1.15	**iO 473 – HB3 100 LA 6 B16D**	3	105	115	110	120	199
20	3090	56.83	1480	1.3							
24	2660	48.95 (1)	1590	1.5							
25	2500	46.03 (1)	1620	1.6							
29	2150	39.61	1690	1.85							
33	1920	35.39	1730	2.1							
37	1700	31.3	1760	2.3							
40	1590	29.32	1740	2.5							
45	1410	25.91	1690	2.8							
48	1310	24.06	1660	3							
53	1180	21.81	1620	3.4							

(1) Finite transmission ratio *i*

P_1 = 1 hp

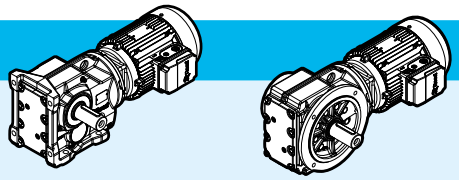

n_2 rpm	T_2 lb in	i	F_{r2} lb	SF			lb foot HB	lb foot HBZ	lb flange HB	lb flange HBZ	p.
19	3290	90.86	1420	1.2	**iO 473 – HB3 90 S 4 B16C**	3	75	83	80	89	199
20	3080	85.12 (1)	1480	1.3							
23	2720	75.2 (1)	1570	1.45							
25	2530	69.84	1620	1.55							
27	2290	63.3 (1)	1660	1.75							
31	2060	56.83	1700	1.95							
36	1770	48.95 (1)	1750	2.2							
38	1670	46.03 (1)	1750	2.4							
44	1430	39.61	1700	2.8							
49	1280	35.39	1650	3							
56	1130	31.3	1610	3.5							
39	1630	29.96	930	1.2	**iO 373 – HB3 100 LA 6 B12D**	3	92	105	96	110	196
46	1360	24.99	920	1.45							
50	1270	23.36	910	1.5							
57	1100	20.19	890	1.65							
68	930	17.15	870	1.9							
76	830	15.31	850	2.1							
89	710	13.08	830	2.3							
96	660	12.14	820	2.4							
111	570	10.49	790	2.8							
130	485	8.91	760	3.3							
39	1610	44.46	930	1.25	**iO 373 – HB3 90 S 4 B12C**	3	65	74	69	78	
46	1380	37.97	920	1.45							
49	1290	35.57	910	1.55							
58	1090	29.96	890	1.85							
60	1040	28.83	890	1.9							
70	905	24.99	870	2.2							
74	845	23.36	860	2.3							
86	730	20.19	830	2.5							
101	620	17.15	800	2.8							
114	555	15.31	785	3.1							
133	475	13.08	755	3.5							
143	440	12.14	745	3.6							
166	380	10.49	715	4.2							
195	325	8.91	685	4.8							
219	290	7.96	665	5.2							

P_1 = 1.5 hp

7.6	12500	153.21 (1)	8990	3.5	**iO 973 – HB3 112 M 6 B30D**	3	415	430	455	465	214
8.3	11400	140.28	8990	3.8							
9.4	10100	123.93 (1)	8990	4.3							
9.9	9570	176.05 (1)	8990	4.5	**iO 973 – HB3 90 L 4 B30D**	3	380	390	415	425	
11	8320	153.21 (1)	8990	5.2							
12	7620	140.28	8990	5.7							

(1) Finite transmission ratio *i*

P_1 = 1.5 hp

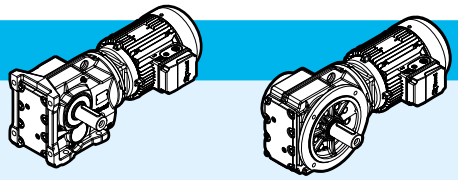

n_2 rpm	T_2 lb in	i	F_{r2} lb	SF			lb foot HB	lb foot HBZ	lb flange HB	lb flange HBZ	p.
9.1	10300	126.91 (1)	6450	2.6	**iO 873 – HB3 112 M 6 B25D**	3	290	305	305	315	211
10	9460	174.19	6460	2.8	**iO 873 – HB3 90 L 4 B25D**	3	250	260	260	270	
11	8930	164.34 (1)	6470	3							
12	8000	147.32 (1)	6480	3.3							
14	6900	126.91 (1)	6490	3.9							
15	6290	115.82	6500	4.2							
12	7910	97.05	4210	1.95	**iO 773 – HB3 112 M 6 B20D**	3	190	205	210	220	208
13	7350	135.28	4250	2.1	**iO 773 – HB3 90 L 4 B20D**	3	145	155	165	175	
14	6980	128.52	4280	2.2							
15	6170	113.56	4340	2.5							
18	5270	97.05	4390	2.9							
20	4830	88.97	4410	3.2							
22	4240	78.07	4440	3.7							
24	4020	73.99	4450	3.9							
16	5870	108.03	2600	1.35	**iO 673 – HB3 90 L 4 B16D**	3	105	115	120	125	205
17	5580	102.62	2640	1.45							
19	4890	90.04	2740	1.65							
23	4150	76.37	2820	1.9							
25	3750	68.95	2860	2.1							
29	3300	60.66	2900	2.4							
30	3110	57.28	2920	2.5							
36	2650	48.77	2920	2.9							
39	2410	44.32	2920	3.2							
45	2090	38.39	2920	3.7							
19	4900	90.26 (1)	1810	1.2	**iO 573 – HB3 90 L 4 B16D**	3	97	105	110	120	202
23	4160	76.56 (1)	1930	1.45							
25	3760	69.12	1980	1.6							
29	3300	60.81 (1)	2030	1.8							
30	3120	57.42 (1)	2040	1.9							
36	2660	48.89	2090	2.2							
39	2410	44.43	2110	2.5							
45	2090	38.49	2140	2.8							
49	1940	35.7	2150	3.1							
57	1650	30.28	2070	3.6							
64	1490	27.34	2020	4							
72	1310	24.05	1950	4.5							
77	1230	22.71	1920	4.8							
90	1050	19.34	1840	5.5							
99	955	17.57	1790	5.7							
114	825	15.22	1720	6.4							
131	720	13.25	1660	7.1							

(1) Finite transmission ratio *i*

P_1 = 1.5 hp

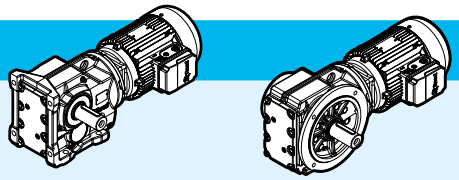

n_2 rpm	T_2 lb in	i	F_{r2} lb	SF			lb foot HB	lb foot HBZ	lb flange HB	lb flange HBZ	p.
146	650	11.92	1590	6.2	**iO 573 – HB3 90 L 4 B16D**	3	97	105	110	120	202
155	610	11.26	1570	6.4							
182	520	9.59	1500	7							
200	475	8.71	1460	7.4							
231	410	7.55	1390	8							
265	355	6.57	1340	8.6							
27	3440	63.3 (1)	1380	1.15	**iO 473 – HB3 90 L 4 B16D**	3	81	90	87	96	199
31	3090	56.83	1490	1.3							
36	2660	48.95 (1)	1590	1.5							
38	2500	46.03 (1)	1590	1.6							
44	2150	39.61	1560	1.85							
49	1920	35.39	1530	2							
56	1700	31.3	1500	2.3							
59	1590	29.32	1480	2.5							
67	1410	25.91	1440	2.8							
72	1310	24.06	1420	3							
80	1180	21.81	1390	3.3							
89	1060	19.58	1350	3.5							
58	1630	29.96	765	1.2	**iO 373 – HB3 90 L 4 B12D**	3	72	80	76	85	196
70	1360	24.99	760	1.45							
74	1270	23.36	760	1.5							
86	1100	20.19	745	1.65							
101	930	17.15	730	1.9							
114	830	15.31	720	2.1							
133	710	13.08	700	2.3							
143	660	12.14	690	2.4							
166	570	10.49	675	2.8							
195	485	8.91	650	3.2							
219	430	7.96	635	3.4							
256	370	6.8	610	3.7							
273	345	6.37	600	3.9							
324	290	5.36	575	4.3							

P_1 = 2 hp

7.6	16600	153.21 (1)	8990	2.6	**iO 973 – HB3 112 MB 6 B30E**	3	415	430	455	465	214
8.3	15200	140.28	8990	2.8							
9.4	13500	123.93 (1)	8990	3.2							
9.9	12800	176.05 (1)	8990	3.4	**iO 973 – HB3 90 LB 4 B30D**	3	380	395	415	430	
11	11100	153.21 (1)	8990	3.9							
12	10200	140.28	8990	4.2							
14	8980	123.93 (1)	8990	4.8							
9.1	13800	126.91 (1)	6390	1.95	**iO 873 – HB3 112 MB 6 B25E**	3	290	305	305	315	211
10	12600	115.82	6410	2.1							
11	11200	102.71 (1)	6440	2.4							

(1) Finite transmission ratio *i*

P_1 = 2 hp

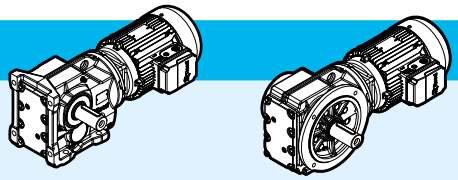

n_2 rpm	T_2 lb in	i	F_{r2} lb	SF			lb foot HB	lb foot HBZ	lb flange HB	lb flange HBZ	p.
10	12600	174.19	6410	2.1	iO 873 – HB3 90 LB 4 B25D	3	250	260	260	275	211
11	11900	164.34 (1)	6420	2.2							
12	10700	147.32 (1)	6440	2.5							
14	9190	126.91 (1)	6460	2.9							
15	8390	115.82	6480	3.2							
17	7440	102.71 (1)	6490	3.6							
20	6250	86.34	6500	4.2							
12	10500	97.05	3950	1.45	iO 773 – HB3 112 MB 6 B20E	3	190	205	210	220	208
13	9670	88.97	4050	1.6							
15	8480	78.07	4160	1.85							
13	9800	135.28	4030	1.6	iO 773 – HB3 90 LB 4 B20D	3	145	160	165	175	
14	9310	128.52	4080	1.65							
15	8230	113.56	4180	1.9							
18	7030	97.05	4280	2.2							
20	6450	88.97	4320	2.4							
22	5660	78.07	4370	2.7							
24	5360	73.99	4380	2.9							
27	4690	64.75	4420	3.3							
30	4230	58.34	4440	3.7							
34	3710	51.18	4460	4.2							
39	3270	45.16	4470	4.7							
43	2900	40.04	4480	5.3							
19	6520	90.04	2490	1.2	iO 673 – HB3 90 LB 4 B16D	3	105	120	120	130	205
23	5530	76.37	2650	1.45							
25	4990	68.95	2730	1.6							
29	4390	60.66	2800	1.8							
30	4150	57.28	2830	1.9							
36	3530	48.77	2880	2.2							
39	3210	44.32	2910	2.4							
45	2780	38.39	2920	2.8							
49	2580	35.62	2920	3							
58	2190	30.22	2920	3.5							
64	1980	27.28	2920	3.9							
73	1740	24	2920	4.4							
25	5010	69.12	1790	1.2	iO 573 – HB3 90 LB 4 B16D	3	97	110	110	125	202
29	4410	60.81 (1)	1900	1.35							
30	4160	57.42 (1)	1930	1.45							
36	3540	48.89	2000	1.65							
39	3220	44.43	2040	1.85							
45	2790	38.49	2070	2.1							
49	2590	35.7	2040	2.3							
57	2190	30.28	1980	2.7							
64	1980	27.34	1930	3							
72	1740	24.05	1880	3.4							

(1) Finite transmission ratio *i*

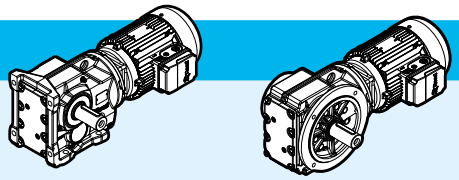

P_1 = 2 hp

n_2 rpm	T_2 lb in	i	F_{r2} lb	SF			foot HB	foot HBZ	flange HB	flange HBZ	p.
77	1650	22.71	1850	3.6	**iO 573 – HB3 90 LB 4 B16D**	3	97	110	110	125	202
90	1400	19.34	1780	4.1							
38	3330	46.03 (1)	1420	1.2	**iO 473 – HB3 90 LB 4 B16D**	3	81	94	87	100	199
44	2870	39.61	1420	1.4							
49	2560	35.39	1410	1.5							
56	2270	31.3	1390	1.75							
59	2120	29.32	1380	1.85							
67	1880	25.91	1350	2.1							
72	1740	24.06	1330	2.3							
80	1580	21.81	1310	2.5							
89	1420	19.58	1290	2.6							
103	1220	16.86	1250	2.9							
110	1150	15.86	1230	3							
128	990	13.65	1190	3.4							
143	885	12.19	1160	3.6							
148	850	11.77	1140	2.9							
74	1690	23.36	660	1.15	**iO 373 – HB3 90 LB 4 B12D**	3	72	85	76	89	196
86	1460	20.19	665	1.25							
101	1240	17.15	660	1.4							
114	1110	15.31	655	1.55							
133	950	13.08	645	1.75							
143	880	12.14	640	1.8							
166	760	10.49	630	2.1							
195	645	8.91	615	2.4							
219	575	7.96	600	2.6							
256	490	6.8	580	2.8							
273	460	6.37	575	2.9							
324	390	5.36	555	3.2							

P_1 = 3 hp

9.4	20000	123.93 (1)	8990	2.2	**iO 973 – HB3 132 S 6 B30G**	3	445	470	485	510	214
11	17000	105.13	8990	2.5							
10	18900	176.05 (1)	8990	2.3	**iO 973 – HB3 112 MA 4 B30E**	3	410	420	445	460	
11	16500	153.21 (1)	8990	2.6							
13	15100	140.28	8990	2.9							
14	13300	123.93 (1)	8990	3.2							
17	11300	105.13	8990	3.8							
18	10400	96.8	8990	4.1							
12	15800	147.32 (1)	6350	1.7	**iO 873 – HB3 112 MA 4 B25E**	3	285	295	295	310	211
14	13600	126.91 (1)	6390	1.95							
15	12400	115.82	6410	2.1							
17	11000	102.71 (1)	6440	2.4							
20	9280	86.34	6460	2.9							
22	8520	79.34	6470	3.1							

(1) Finite transmission ratio *i*

P_1 = 3 hp

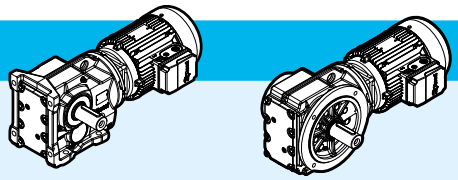

n_2 rpm	T_2 lb in	i	F_{r2} lb	SF			lb foot HB	lb foot HBZ	lb flange HB	lb flange HBZ	p.
25	7570	70.46	6480	3.5	**iO 873 – HB3 112 MA 4 B25E**	3	285	295	295	310	211
28	6770	63 (1)	6490	3.9							
15	12200	113.56	3710	1.25	**iO 773 – HB3 112 MA 4 B20E**	3	180	195	200	210	208
18	10400	97.05	3940	1.5							
20	9560	88.97	4040	1.6							
23	8390	78.07	4160	1.85							
24	7950	73.99	4200	1.95							
27	6960	64.75	4280	2.2							
30	6270	58.34	4320	2.5							
34	5500	51.18	4370	2.8							
39	4850	45.16	4410	3.2							
44	4300	40.04	4430	3.6							
50	3780	35.2	4450	4.1							
57	3320	30.89	4470	4.7							
60	3140	29.27	4480	4.9							
69	2750	25.62	4490	5.6							
29	6520	60.66	2470	1.2	**iO 673 – HB3 112 MA 4 B16E**	3	140	155	150	165	205
31	6150	57.28	2540	1.25							
36	5240	48.77	2680	1.5							
40	4760	44.32	2750	1.65							
46	4120	38.39	2820	1.9							
49	3830	35.62	2850	2							
58	3250	30.22	2900	2.4							
65	2930	27.28	2920	2.6							
73	2580	24	2920	3							
78	2430	22.66	2920	3.1							
91	2070	19.3	2920	3.4							
100	1880	17.54	2920	3.6							
116	1630	15.19	2920	3.8							
133	1420	13.22	2920	4.2							
141	1340	12.48	2920	3.5							
166	1140	10.63	2920	3.9							
182	1040	9.66	2910	4.1							
210	900	8.37	2800	4.3							
242	780	7.28	2700	4.8							
36	5250	48.89	1730	1.15	**iO 573 – HB3 112 MA 4 B16E**	3	130	145	145	160	202
40	4770	44.43	1830	1.25							
46	4130	38.49	1850	1.45							
49	3840	35.7	1830	1.55							
58	3250	30.28	1800	1.8							
64	2940	27.34	1770	2							
73	2580	24.05	1740	2.3							
77	2440	22.71	1720	2.4							
91	2080	19.34	1670	2.8							
100	1890	17.57	1640	2.9							
116	1640	15.22	1590	3.2							

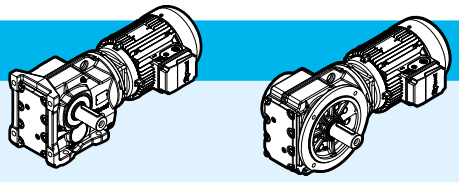

P_1 = 3 hp

n_2 rpm	T_2 lb in	i	F_{r2} lb	SF			lb foot HB	lb foot HBZ	lb flange HB	lb flange HBZ	p.
133	1420	13.25	1540	3.6	**iO 573 – HB3 112 MA 4 B16E**	3	130	145	145	160	202
148	1280	11.92	1470	3.1							
156	1210	11.26	1450	3.2							
68	2780	25.91	1170	1.45	**iO 473 – HB3 112 MA 4 B16E**	3	115	125	120	135	199
81	2340	21.81	1160	1.65							
90	2100	19.58	1150	1.8							
104	1810	16.86	1130	1.95							
111	1700	15.86	1120	2							
129	1470	13.65	1100	2.3							
144	1310	12.19	1080	2.4							
150	1260	11.77	1060	1.95							
167	1130	10.56	1040	2.2							
193	980	9.1	1010	2.5							
206	920	8.56	990	2.6							
239	790	7.36	960	2.8							
135	1410	13.08	540	1.15	**iO 373 – HB3 112 MA 4 B12E**	3	105	115	105	120	196
168	1130	10.49	545	1.4							
197	960	8.91	540	1.65							
221	855	7.96	535	1.75							
259	730	6.8	525	1.9							
276	685	6.37	520	1.95							
328	575	5.36	510	2.2							

P_1 = 4 hp

9.4	26700	123.93 (1)	8990	1.6	**iO 973 – HB3 132 M 6 B30G**	3	465	490	500	530	214
11	22700	105.13	8990	1.9							
12	20900	96.8	8990	2.1							
14	18600	86.52	8990	2.3							
9.9	25400	176.05 (1)	8990	1.7	**iO 973 – HB3 112 M 4 B30E**	3	415	430	450	465	
11	22100	153.21 (1)	8990	1.95							
12	20200	140.28	8990	2.1							
14	17900	123.93 (1)	8990	2.4							
17	15100	105.13	8990	2.8							
18	13900	96.8	8990	3.1							
20	12500	86.52	8990	3.5							
22	11200	77.89 (1)	8990	3.8							
25	10200	70.54	8990	4.2							
28	9010	62.55	8990	4.8							
31	8150	56.55	8990	5.3							
12	21200	147.32 (1)	6220	1.25	**iO 873 – HB3 112 M 4 B25E**	3	290	300	300	315	211
14	18300	126.91 (1)	6290	1.45							
15	16700	115.82	6330	1.6							
17	14800	102.71 (1)	6370	1.8							
20	12400	86.34	6410	2.1							

(1) Finite transmission ratio *i*

P_1 = 4 hp

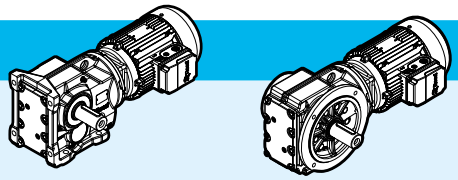

n_2 rpm	T_2 lb in	i	F_{r2} lb	SF			lb foot HB	lb foot HBZ	lb flange HB	lb flange HBZ	p.
22	11400	79.34	6430	2.3	**iO 873 – HB3 112 M 4 B25E**	3	290	300	300	315	211
25	10200	70.46	6450	2.6							
28	9080	63 (1)	6470	2.9							
31	8160	56.64	6480	3.3							
36	7080	49.16	6490	3.7							
40	6340	44.02	6330	4							
48	5260	36.52 (1)	6060	4.7							
20	12800	88.97	3620	1.2	**iO 773 – HB3 112 M 4 B20E**	3	190	205	205	220	208
22	11200	78.07	3850	1.4							
24	10700	73.99	3920	1.45							
27	9330	64.75	4070	1.65							
30	8400	58.34	4160	1.85							
34	7370	51.18	4250	2.1							
39	6510	45.16	4310	2.4							
44	5770	40.04	4360	2.7							
50	5070	35.2	4400	3.1							
57	4450	30.89	4430	3.5							
39	6390	44.32	2510	1.2	**iO 673 – HB3 112 M 4 B16E**	3	145	160	155	170	205
46	5530	38.39	2650	1.4							
49	5130	35.62	2700	1.5							
58	4350	30.22	2800	1.75							
64	3930	27.28	2840	1.95							
73	3460	24	2890	2.2							
77	3260	22.66	2900	2.3							
91	2780	19.3	2920	2.5							
100	2530	17.54	2920	2.6							
115	2190	15.19	2920	2.9							
132	1900	13.22	2920	3.1							
140	1800	12.48	2920	2.6							
165	1530	10.63	2910	2.9							
181	1390	9.66	2850	3.1							
58	4360	30.28	1620	1.35	**iO 573 – HB3 112 M 4 B16E**		135	150	150	165	202
64	3940	27.34	1610	1.5							
73	3460	24.05	1590	1.7							
77	3270	22.71	1580	1.8							
90	2790	19.34	1550	2.1							
100	2530	17.57	1530	2.1							
115	2190	15.22	1500	2.4							
132	1910	13.25	1460	2.7							
147	1720	11.92	1390	2.3							
155	1620	11.26	1380	2.4							
183	1380	9.59	1330	2.6							
201	1250	8.71	1310	2.8							
232	1090	7.55	1270	3							
266	945	6.57	1230	3.2							

P_1 = 4 hp

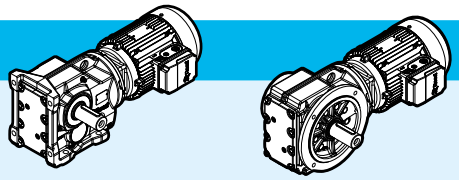

n_2 rpm	T_2 lb in	i	F_{r2} lb	SF			foot HB	foot HBZ	flange HB	flange HBZ	p.
89	2820	19.58	1020	1.3	**iO 473 – HB3 112 M 4 B16E**	3	120	135	125	140	199
104	2430	16.86	1020	1.45							
110	2280	15.86	1010	1.5							
128	1970	13.65	1000	1.7							
144	1760	12.19	990	1.8							
149	1700	11.77	970	1.45							
166	1520	10.56	960	1.65							
192	1310	9.1	940	1.9							
205	1230	8.56	930	1.95							
238	1060	7.36	910	2.1							
266	950	6.58	890	2.2							
301	835	5.81	870	2.4							
196	1280	8.91	465	1.2	**iO 373 – HB3 112 M 4 B12E**	3	110	125	115	130	196
220	1150	7.96	470	1.3							
257	980	6.8	470	1.4							
275	915	6.37	470	1.45							
326	775	5.36	465	1.6							

P_1 = 5.4 hp

11	29600	153.21 (1)	8990	1.45	**iO 973 – HB3 112 MB 4 B30F**		420	440	455	475	214
13	27100	140.28	8990	1.6							
14	24000	123.93 (1)	8990	1.8							
17	20300	105.13	8990	2.1							
18	18700	96.8	8990	2.3							
20	16700	86.52	8990	2.6							
23	15100	77.89 (1)	8990	2.9							
25	13600	70.54	8990	3.2							
15	22400	115.82	6180	1.2	**iO 873 – HB3 112 MB 4 B25F**		295	315	305	325	211
17	19900	102.71 (1)	6250	1.35							
20	16700	86.34	6330	1.6							
22	15300	79.34	6360	1.75							
25	13600	70.46	6390	1.95							
28	12200	63 (1)	6420	2.2							
31	11000	56.64	6400	2.4							
36	9510	49.16	6230	2.8							
40	8510	44.02	6100	3							
48	7060	36.52 (1)	5860	3.5							
27	12500	64.75	3670	1.25	**iO 773 – HB3 112 MB 4 B20F**		195	215	210	230	208
30	11300	58.34	3840	1.35							
34	9900	51.18	4010	1.55							
39	8730	45.16	4130	1.75							
44	7740	40.04	4220	2							
46	7420	38.39	4240	2							

(1) Finite transmission ratio *i*

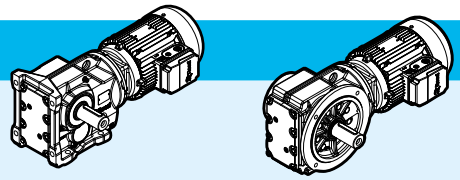

P_1 = 5.4 hp

n_2 rpm	T_2 lb in	i	F_{r2} lb	SF			lb foot HB	lb foot HBZ	lb flange HB	lb flange HBZ	p.
50	6800	35.2	4290	2.3	**iO 773 – HB3 112 MB 4 B20F**	3	195	215	210	230	208
57	5970	30.89	4340	2.6							
60	5660	29.27	4360	2.7							
69	4950	25.62	4400	3.1							
76	4460	23.08	4420	3.5							
87	3910	20.25	4450	3.8							
58	5840	30.22	2600	1.3	**iO 673 – HB3 112 MB 4 B16F**	3	150	170	160	180	205
65	5270	27.28	2680	1.45							
73	4640	24	2770	1.65							
78	4380	22.66	2800	1.7							
91	3730	19.3	2860	1.85							
100	3390	17.54	2890	1.95							
116	2940	15.19	2920	2.1							
133	2560	13.22	2920	2.3							
141	2410	12.48	2920	1.95							
166	2060	10.63	2820	2.2							
182	1870	9.66	2760	2.3							
210	1620	8.37	2680	2.4							
242	1410	7.28	2590	2.6							
64	5290	27.34	1380	1.1	**iO 573 – HB3 112 MB 4 B16F**	3	140	160	155	175	202
73	4650	24.05	1390	1.25							
77	4390	22.71	1400	1.35							
91	3740	19.34	1390	1.55							
100	3400	17.57	1390	1.6							
116	2940	15.22	1370	1.8							
133	2560	13.25	1350	2							
148	2310	11.92	1280	1.75							
156	2180	11.26	1270	1.8							
184	1850	9.59	1240	1.95							
202	1680	8.71	1230	2.1							
233	1460	7.55	1200	2.2							
268	1270	6.57	1160	2.4							

P_1 = 7.5 hp

14	33100	123.93 (1)	8990	1.3	**iO 973 – HB3 132 M 4 B30G**	3	470	495	510	530	214
17	28100	105.13	8990	1.55							
18	25900	96.8	8990	1.65							
20	23100	86.52	8990	1.85							
23	20800	77.89 (1)	8990	2.1							
25	18800	70.54	8920	2.3							
28	16700	62.55	8730	2.6							
31	15100	56.55	8570	2.9							
37	12800	47.93 (1)	8290	3.4							

P_1 = 7.5 hp

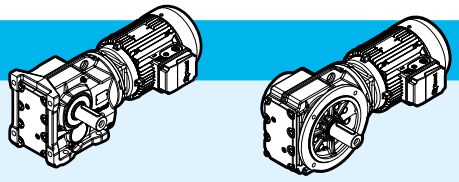

n_2 rpm	T_2 lb in	i	F_{r2} lb	SF			lb foot HB	lb foot HBZ	lb flange HB	lb flange HBZ	p.
21	23100	86.34	6160	1.15	**iO 873 – HB3 132 M 4 B25G**	3	350	370	360	385	211
22	21200	79.34	6140	1.25							
25	18800	70.46	6100	1.4							
28	16800	63 (1)	6030	1.6							
31	15100	56.64	5960	1.75							
36	13100	49.16	5860	2							
40	11800	44.02	5760	2.2							
48	9750	36.52 (1)	5590	2.5							
56	8380	31.39	5430	3.2							
64	7440	27.88	5310	3.4							
35	13700	51.18	3460	1.15	**iO 773 – HB3 132 M 4 B20G**	3	245	265	260	285	208
39	12100	45.16	3720	1.3							
44	10700	40.04	3910	1.45							
57	8250	30.89	4170	1.9							
60	7820	29.27	4210	2							
69	6840	25.62	4280	2.3							
77	6160	23.08	4330	2.5							
87	5410	20.25	4340	2.8							
99	4770	17.87	4230	3							
112	4230	15.84	4120	3.2							
131	3610	13.52	3980	3.4							
143	3300	12.36	3840	2.7							
163	2890	10.84	3730	3							
74	6410	24	2490	1.2	**iO 673 – HB3 132 M 4 B16G**	3	200	225	215	235	205
78	6050	22.66	2560	1.25							
92	5150	19.3	2700	1.35							
101	4680	17.54	2760	1.45							
117	4060	15.19	2830	1.55							
134	3530	13.22	2870	1.7							
142	3330	12.48	2760	1.4							
167	2840	10.63	2690	1.55							
183	2580	9.66	2640	1.65							
212	2230	8.37	2570	1.75							
243	1940	7.28	2500	1.9							
92	5160	19.34	1150	1.1	**iO 573 – HB3 132 M 4 B16G**	3	190	215	205	230	202
101	4690	17.57	1170	1.15							
116	4070	15.22	1180	1.3							
148	3180	11.92	1110	1.25							
157	3010	11.26	1110	1.3							
185	2560	9.59	1110	1.45							
203	2330	8.71	1100	1.5							
235	2020	7.55	1090	1.65							

(1) Finite transmission ratio *i*

P_1 = 10 hp

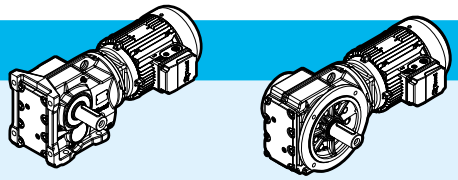

n_2 rpm	T_2 lb in	i	F_{r2} lb	SF			lb foot HB	lb foot HBZ	lb flange HB	lb flange HBZ	p.
17	37600	105.13	8620	1.15	iO 973 – HB3 132 MB 4 B30G	3	495	520	530	560	214
18	34700	96.8	8590	1.25							
20	31000	86.52	8530	1.4							
23	27900	77.89 (1)	8450	1.55							
25	25300	70.54	8360	1.7							
28	22400	62.55	8240	1.9							
31	20300	56.55	8120	2.1							
37	17200	47.93 (1)	7910	2.5							
42	15000	41.87	7730	2.9							
46	13700	38.3	7600	3.1							
51	12300	34.23	7440	3.5							
28	22600	63 (1)	5460	1.2	iO 873 – HB3 132 MB 4 B25G	3	370	395	385	405	211
31	20300	56.64	5450	1.3							
36	17600	49.16	5410	1.5							
40	15800	44.02	5360	1.65							
48	13100	36.52 (1)	5250	1.9							
56	11200	31.39	5150	2.4							
63	9980	27.88	5050	2.6							
71	8920	24.92	4960	2.8							
79	8020	22.41	4870	2.8							
91	6960	19.45	4740	3.3							
101	6230	17.42	4630	3.4							
110	5730	16	4450	2.8							
122	5170	14.45	4460	4							
57	11100	30.89	3880	1.4	iO 773 – HB3 132 MB 4 B20G	3	265	290	285	310	208
60	10500	29.27	3950	1.5							
69	9170	25.62	4090	1.7							
76	8260	23.08	4170	1.85							
87	7250	20.25	4120	2.1							
99	6400	17.87	4040	2.2							
111	5670	15.84	3950	2.4							
130	4840	13.52	3840	2.5							
142	4420	12.36	3690	2							
162	3880	10.84	3600	2.3							
184	3420	9.56	3510	2.4							
208	3040	8.48	3420	2.6							
243	2590	7.24	3300	2.8							
100	6280	17.54	2530	1.05	iO 673 – HB3 132 MB 4 B16G	3	225	250	235	260	205
116	5440	15.19	2660	1.15							
133	4730	13.22	2690	1.25							
141	4470	12.48	2570	1.05							
166	3810	10.63	2520	1.15							
182	3460	9.66	2490	1.25							
210	3000	8.37	2440	1.3							
242	2610	7.28	2390	1.45							

(1) Finite transmission ratio *i*

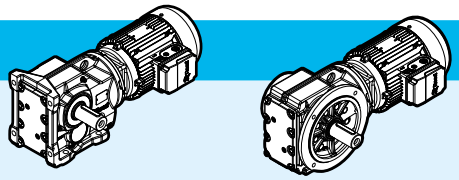

P_1 = 10 hp

n_2 rpm	T_2 lb in	i	F_{r2} lb	SF			lb foot HB	lb foot HBZ	lb flange HB	lb flange HBZ	p.
184	3430	9.59	950	1.05	**iO 573 – HB3 132 MB 4 B16G**	3	215	240	230	255	202
202	3120	8.71	960	1.1							
233	2700	7.55	960	1.2							

P_1 = 12.3 hp

20	38000	86.52	7910	1.15	**iO 973 – HB3 132 MC 4 B30H**	3	495	520	530	560	214
23	34200	77.89 (1)	7890	1.25							
25	31000	70.54	7850	1.4							
28	27500	62.55	7790	1.55							
31	24800	56.55	7710	1.75							
37	21100	47.93 (1)	7570	2							
42	18400	41.87	7430	2.3							
46	16800	38.3	7320	2.6							
52	15000	34.23	7190	2.9							
57	13500	30.82	7060	3.2							
63	12300	27.91	6930	3.5							
71	10900	24.75	6770	4							
36	21600	49.16	5000	1.25	**iO 873 – HB3 132 MC 4 B25H**	3	370	395	385	405	211
40	19300	44.02	4990	1.35							
48	16000	36.52 (1)	4950	1.55							
56	13800	31.39	4880	1.95							
63	12200	27.88	4820	2.1							
71	10900	24.92	4750	2.3							
79	9840	22.41	4680	2.3							
91	8540	19.45	4580	2.7							
101	7650	17.42	4490	2.8							
110	7030	16	4300	2.3							
122	6340	14.45	4330	3.3							
141	5520	12.56	4210	3.6							
158	4900	11.17	4020	3							
177	4390	10	3930	3.2							
76	10100	23.08	3980	1.5	**iO 773 – HB3 132 MC 4 B20H**	3	265	290	285	310	208
87	8890	20.25	3920	1.7							
99	7850	17.87	3860	1.8							
111	6960	15.84	3800	1.9							
131	5940	13.52	3700	2.1							
143	5430	12.36	3550	1.65							
163	4760	10.84	3480	1.85							
185	4200	9.56	3400	2							
208	3720	8.48	3330	2.1							
244	3180	7.24	3220	2.3							

(1) Finite transmission ratio *i*

P_1 = 15 hp

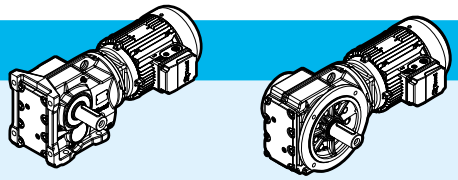

n_2 rpm	T_2 lb in	i	F_{r2} lb	SF			lb foot HB	lb foot HBZ	lb flange HB	lb flange HBZ	p.
25	37600	70.54	7260	1.15	iO 973 – HB3 160 M 4 B30H	3	380	–	415	–	214
28	33300	62.55	7260	1.3							
31	30100	56.55	7240	1.45							
37	25500	47.93 (1)	7160	1.7							
42	22300	41.87	7070	1.95							
46	20400	38.3	7000	2.1							
52	18200	34.23	6900	2.4							
58	16400	30.82	6800	2.6							
64	14900	27.91	6690	2.9							
72	13200	24.75	6560	3.3							
79	11900	22.37	6440	3.6							
40	23400	44.02	4560	1.1	iO 873 – HB3 160 M 4 B25H	3	250	–	265	–	211
49	19500	36.52 (1)	4590	1.25							
57	16700	31.39	4580	1.6							
64	14800	27.88	4550	1.75							
71	13300	24.92	4510	1.85							
79	11900	22.41	4460	1.9							
91	10400	19.45	4390	2.2							
102	9270	17.42	4320	2.3							
111	8520	16	4110	1.9							
123	7690	14.45	4190	2.7							
141	6690	12.56	4090	3							
159	5950	11.17	3890	2.5							
178	5320	10	3820	2.6							
214	4420	8.29	3680	2.9							
246	3840	7.21	3580	3.1							
77	12300	23.08	3690	1.25	iO 773 – HB3 160 M 4 B20H	3	145	–	160	–	208
88	10800	20.25	3690	1.4							
99	9510	17.87	3660	1.5							
112	8430	15.84	3620	1.6							
131	7200	13.52	3550	1.7							
144	6580	12.36	3390	1.35							
164	5770	10.84	3340	1.5							
186	5090	9.56	3280	1.65							
209	4520	8.48	3220	1.75							
245	3860	7.24	3130	1.9							

P_1 = 20 hp

37	34000	47.93 (1)	6410	1.25	iO 973 – HB3 160 L 4 B30H	3	380	–	415	–	214
42	29700	41.87	6420	1.45							
46	27200	38.3	6400	1.6							
52	24300	34.23	6360	1.75							
58	21900	30.82	6310	1.95							
64	19800	27.91	6250	2.2							

(1) Finite transmission ratio *i*

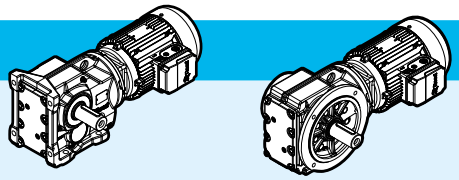

P_1 = 20 hp

n_2 rpm	T_2 lb in	i	F_{r2} lb	SF			foot HB	foot HBZ	flange HB	flange HBZ	p.
72	17600	24.75	6170	2.5	iO 973 – HB3 160 L 4 B30H	3	380	–	415	–	214
79	15900	22.37	6090	2.7							
94	13500	18.96	5940	3.2							
107	11800	16.56	5800	3.4							
57	22300	31.39	4010	1.2	iO 873 – HB3 160 L 4 B25H	3	250	–	265	–	211
64	19800	27.88	4040	1.3							
71	17700	24.92	4060	1.4							
79	15900	22.41	4060	1.45							
91	13800	19.45	4030	1.65							
102	12400	17.42	4000	1.75							
111	11400	16	3770	1.4							
123	10300	14.45	3930	2							
141	8920	12.56	3860	2.2							
159	7930	11.17	3660	1.85							
178	7100	10	3610	2							
214	5890	8.29	3510	2.2							
246	5120	7.21	3430	2.4							

P_1 = 25 hp

43	37100	41.87	5760	1.15	iO 973 – HB3 180 M 4 B30L	3	380	–	415	–	214
58	27300	30.82	5830	1.6							
64	24700	27.91	5820	1.75							
72	21900	24.75	5780	1.95							
80	19800	22.37	5740	2.2							
94	16800	18.96	5640	2.6							
107	14700	16.56	5540	2.8							
129	12300	13.85	5400	3.1							
148	10600	11.99	5270	3.3							
171	9210	10.41	4960	2.8							
71	22100	24.92	3610	1.1	iO 873 – HB3 180 M 4 B25L	3	250	–	265	–	211
79	19800	22.41	3650	1.15							
92	17200	19.45	3680	1.3							
102	15400	17.42	3690	1.4							
123	12800	14.45	3670	1.65							
142	11100	12.56	3630	1.8							
159	9880	11.17	3420	1.5							
178	8850	10	3390	1.6							
215	7340	8.29	3330	1.75							
247	6380	7.21	3270	1.9							

(1) Finite transmission ratio *i*

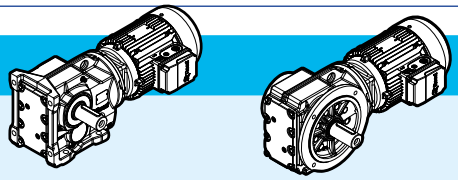

P_1 = 30 hp

n_2 rpm	T_2 lb in	i	F_{r2} lb	SF			lb foot HB	lb foot HBZ	lb flange HB	lb flange HBZ	p.
58	32700	30.82	5350	1.3	**iO 973 – HB3 180 L 4 B30L**	3	380	–	415	–	214
64	29600	27.91	5380	1.45							
72	26300	24.75	5400	1.65							
80	23800	22.37	5390	1.8							
94	20100	18.96	5340	2.1							
107	17600	16.56	5290	2.3							
129	14700	13.85	5180	2.6							
148	12700	11.99	5080	2.7							
171	11100	10.41	4770	2.3							
204	9250	8.71	4650	2.5							
92	20700	19.45	3330	1.1	**iO 873 – HB3 180 L 4 B25L**	3	250	–	265	–	211
102	18500	17.42	3370	1.15							
123	15300	14.45	3410	1.35							
142	13300	12.56	3410	1.5							
159	11900	11.17	3180	1.25							
178	10600	10	3180	1.3							
215	8810	8.29	3160	1.45							
247	7660	7.21	3120	1.55							

P_1 = 40 hp

72	34900	24.75	4620	1.25	**iO 973 – HB3 200 L 4 B30M**	3	390	–	430	–	214
80	31600	22.37	4690	1.35							
94	26800	18.96	4750	1.6							
108	23400	16.56	4770	1.75							
129	19600	13.85	4750	1.95							
149	16900	11.99	4710	2.1							
171	14700	10.41	4370	1.75							
205	12300	8.71	4320	1.9							

page intentionally left blank

12

Bevel helical Dimensional drawings - iO

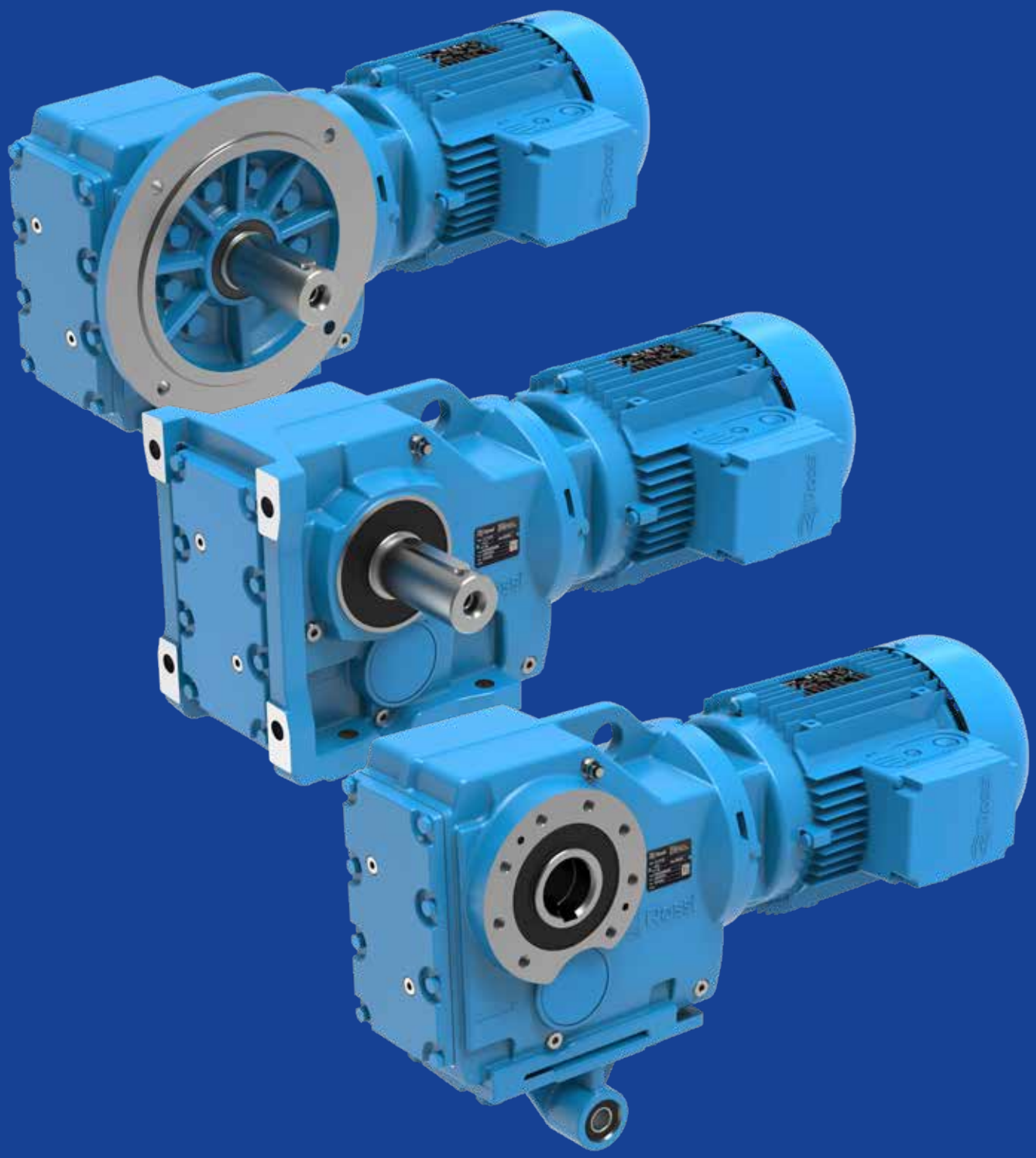

Section contents

12.1	iO 373	196
12.2	iO 473	199
12.3	iO 573	202
12.4	iO 673	205
12.5	iO 773	208
12.6	iO 873	211
12.7	iO 973	214

12.1

iO 373 PA

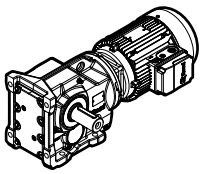

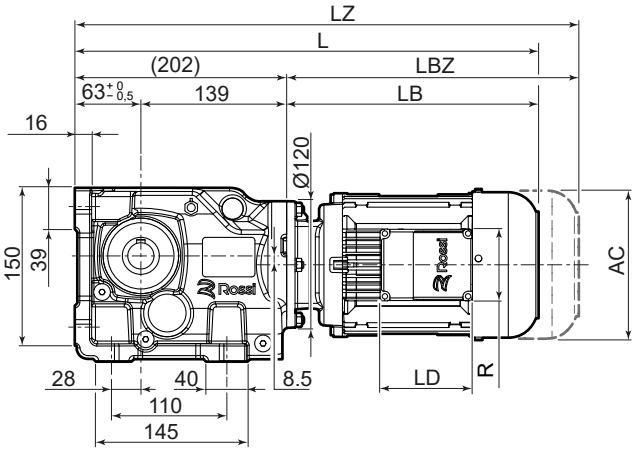

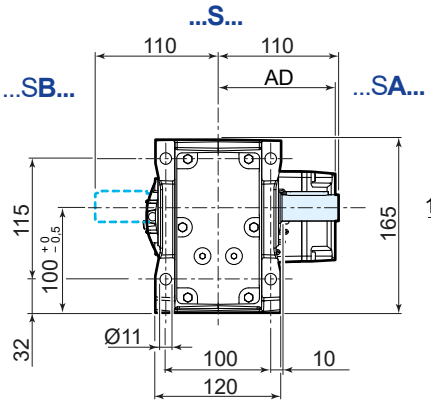

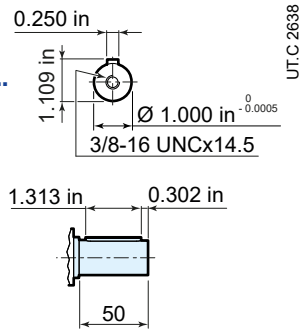

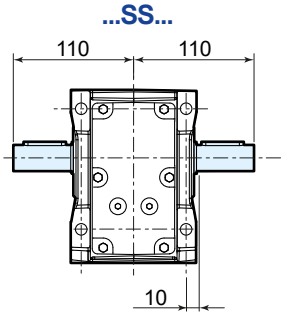

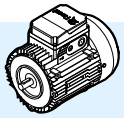

	63	71	80	90S [2]	90L	100	112
AC	123	138	156	176	176	194	218
AD	95	112	121	141	141	151	163
LB	211	237	266	290	320	351	389
LBZ	266	299	335	369	399	446	488
L [1]	413	439	468	492	522	553	591
LZ [1]	468	501	537	571	601	648	690
LD	103	103	103	136	136	136	136
R	86	86	86	106	106	106	106

163
83
274

[1] See also pages 89, 90.
For details about drive end **A** and **B** see page 41.
[2] The motor protrudes the gear reducer foot mounting surface.

iO 373 FA...F316

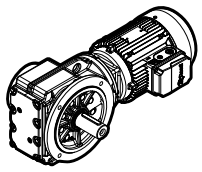

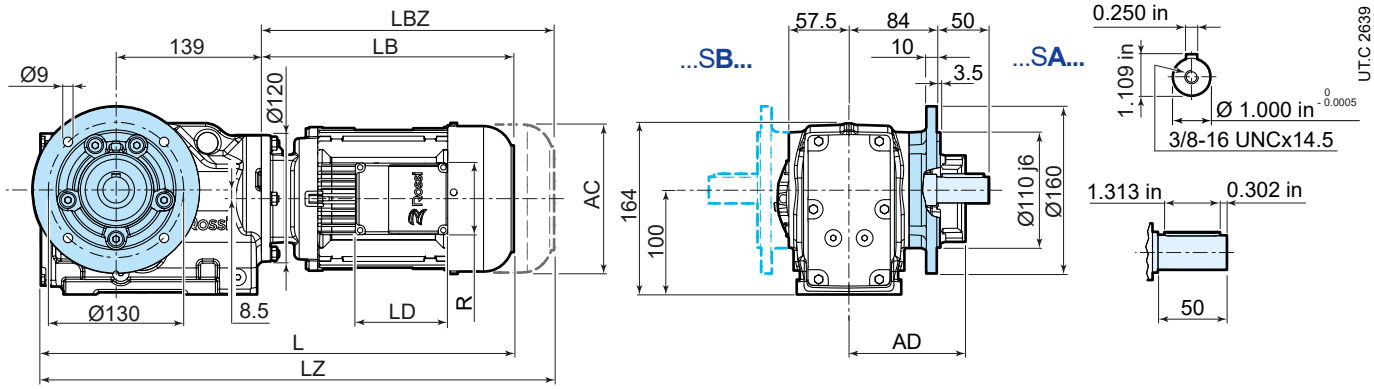

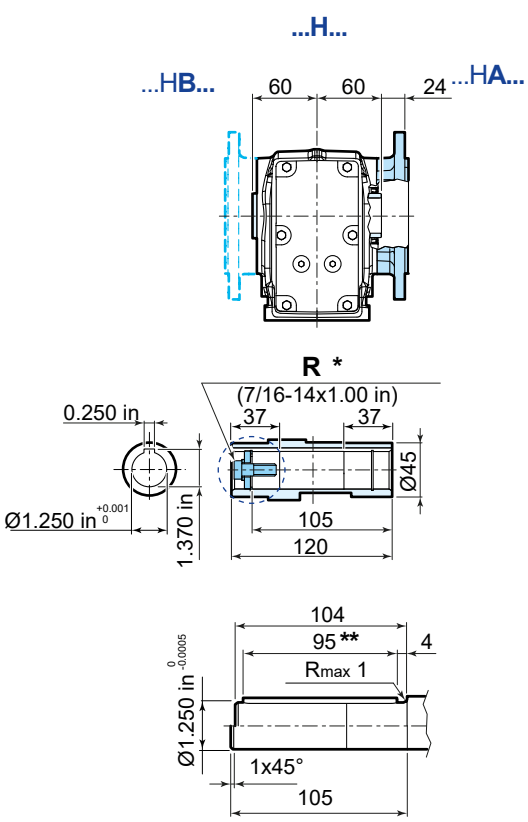

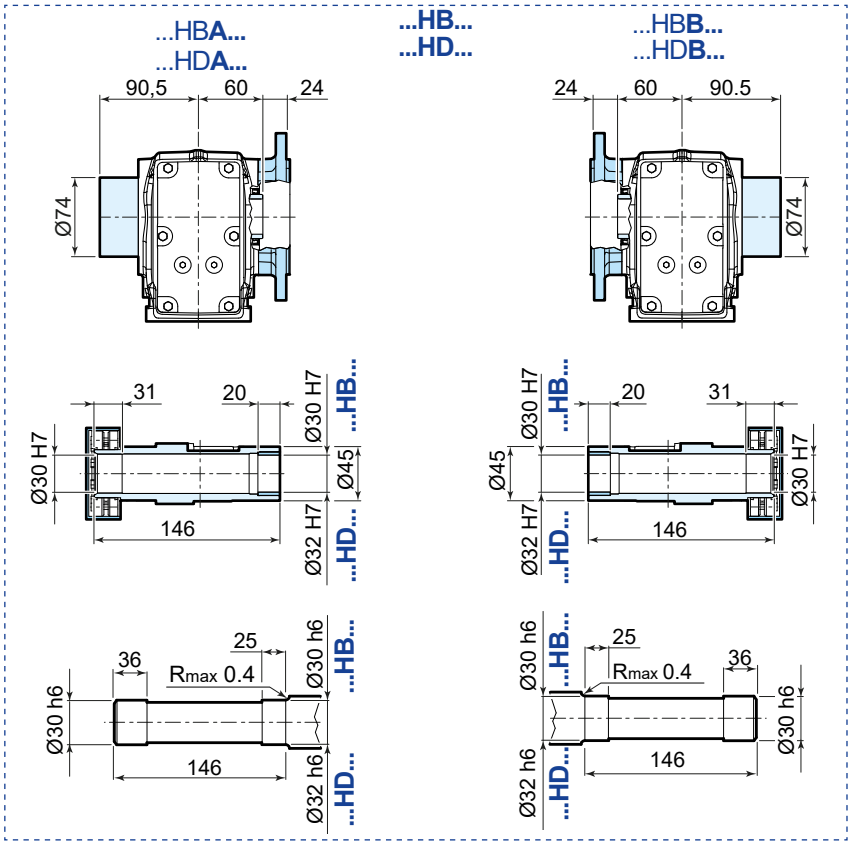

	63	71	80	90S	90L	100	112
AC	123	138	156	176	176	194	218
AD	95	112	121	141	141	151	163
LB	211	237	266	290	320	351	389
LBZ	266	299	335	369	399	446	488
L [1]	422	448	477	501	531	562	600
LZ [1]	477	510	546	580	610	657	699
LD	103	103	103	136	136	136	136
R	86	86	86	106	106	106	106

163
83
274
FB14 88

[1] See also pages 89, 90..
For details about drive end **A** and **B** see page 41.

* options on request.
** both version with key

iO 373 SA

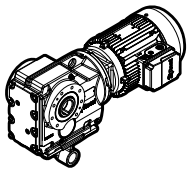

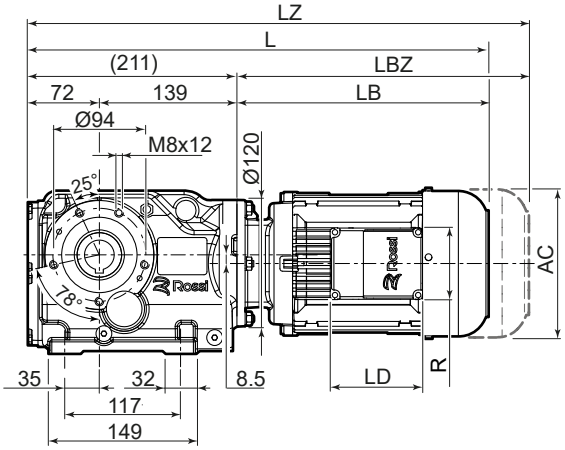

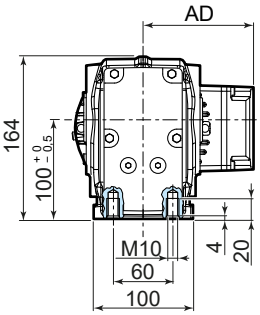

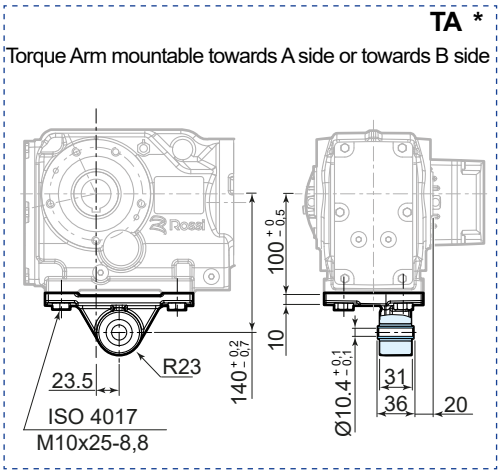

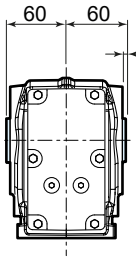

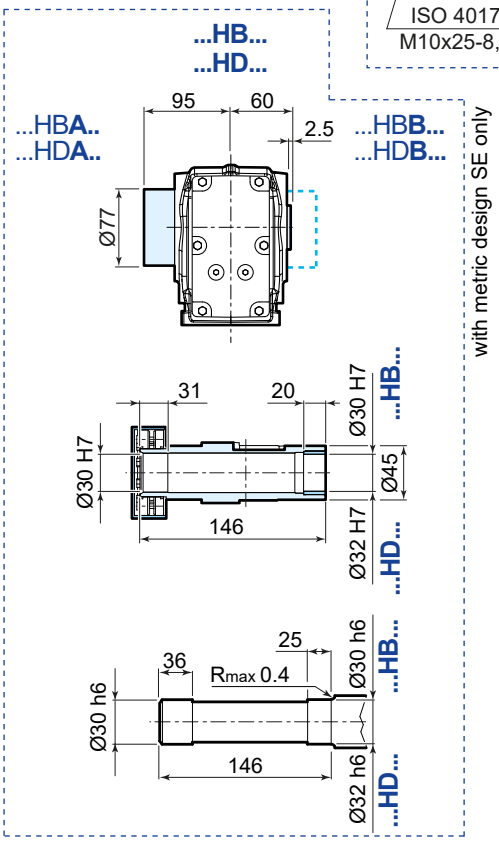

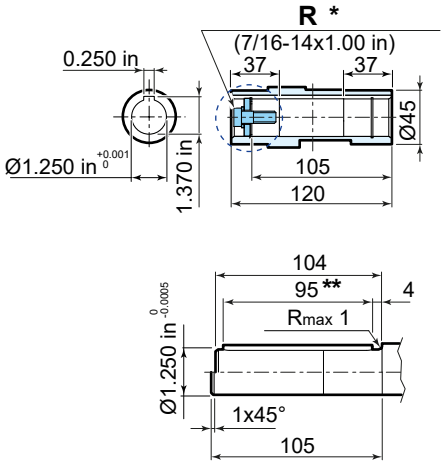

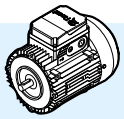

	63	71	80	90S	90L	100	112
AC	123	138	156	176	176	194	218
AD	95	112	121	141	141	151	163
LB	211	237	266	290	320	351	389
LBZ	266	299	335	369	399	446	488
L [1]	422	448	477	501	531	562	600
LZ [1]	477	510	546	580	610	657	699
LD	103	103	103	136	136	136	136
R	86	86	86	106	106	106	106

163
83
274

[1] See also pages 89, 90.
For details about drive end **A** and **B** see page 41.

* options on request.
** both version with key

12.2

iO 473 PA

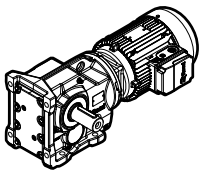

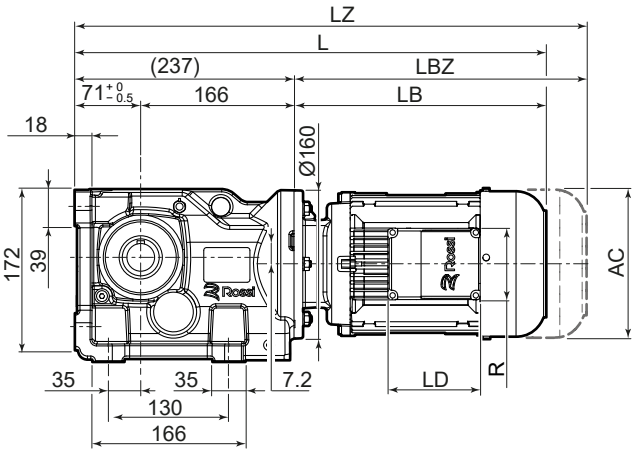

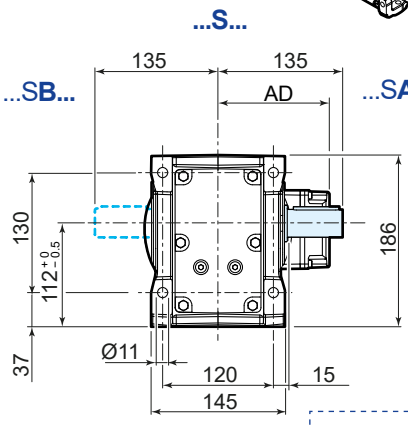

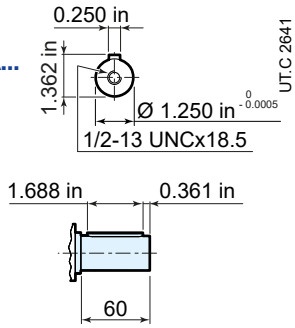

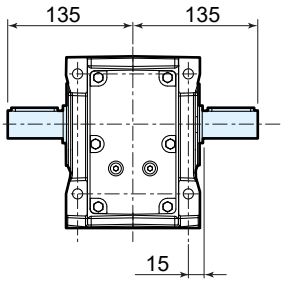

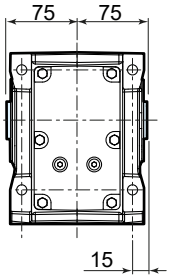

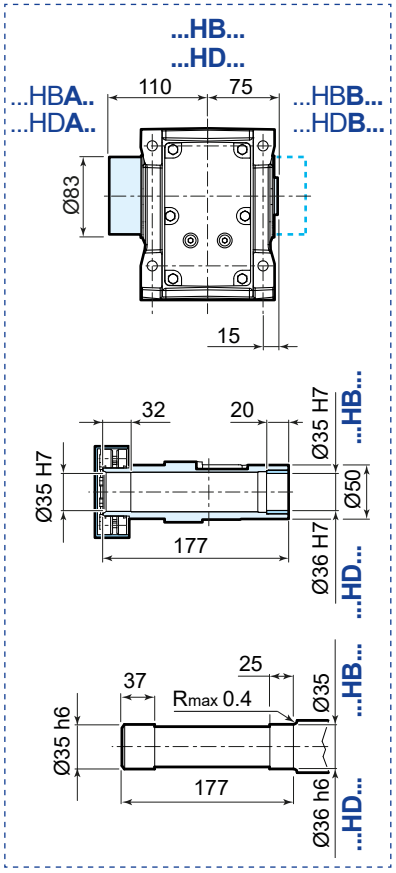

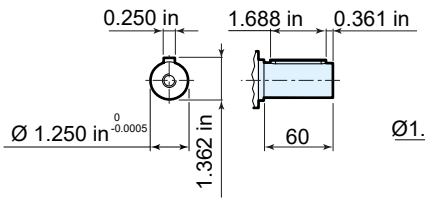

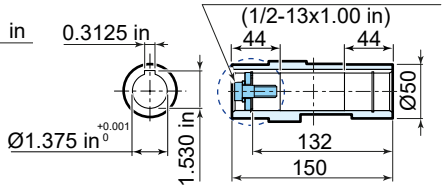

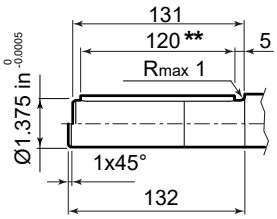

	63	71	80	90S [2]	90L	100	112
AC	123	138	156	176	176	194	218
AD	95	112	121	141	141	151	163
LB	205	231	260	283	313	345	383
LBZ	260	293	329	362	392	440	482
L [1]	442	468	497	520	550	582	620
LZ [1]	497	530	566	599	629	677	719
LD	103	103	103	136	136	136	136
R	86	86	86	106	106	106	106

163
83
274

[1] See also pages 89, 90.
For details about drive end **A** and **B** see page 41.
[2] The motor protrudes the gear reducer foot mounting surface.

* options on request.
** both version with key

iO 473 FA...F420

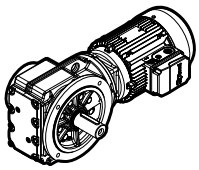

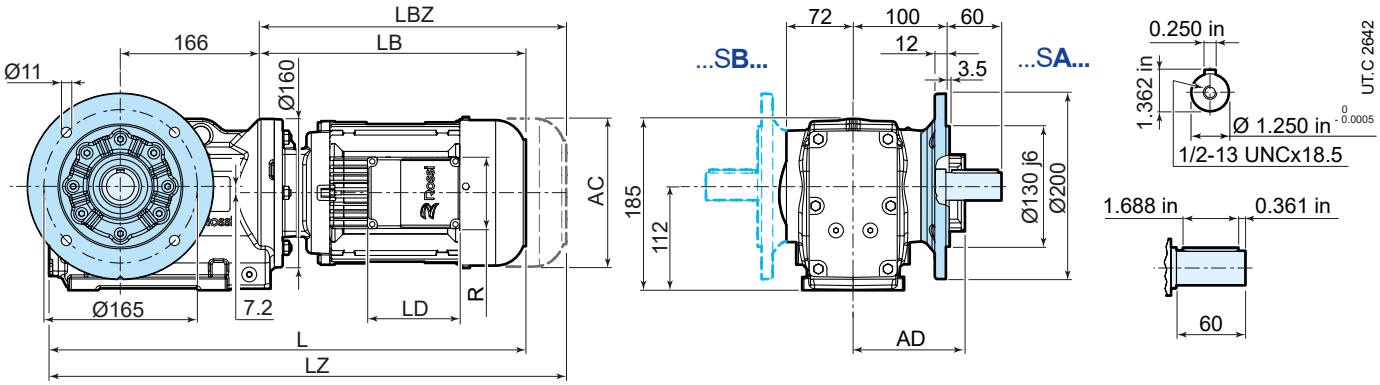

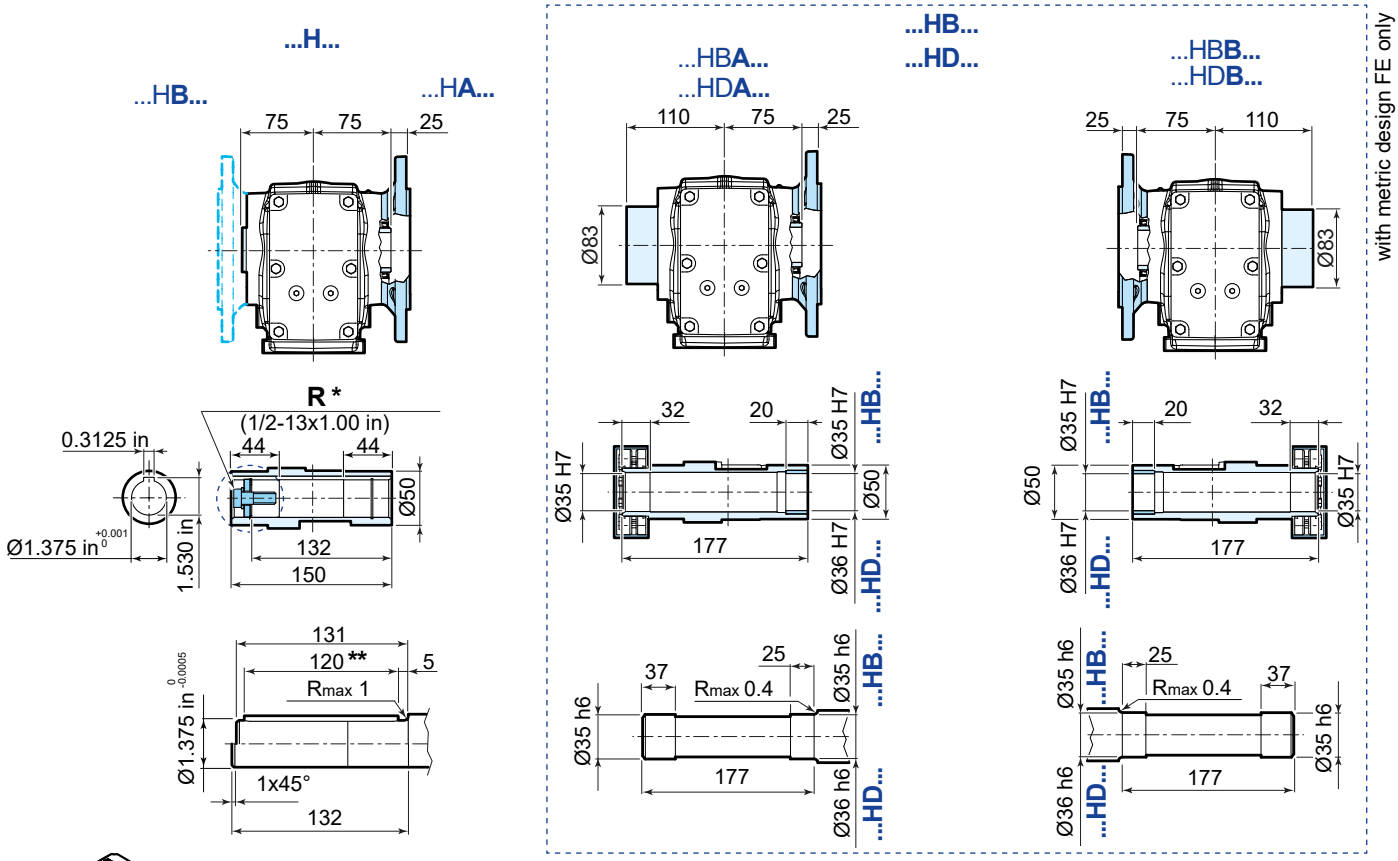

	63	71	80	90S	90L	100	112
AC	123	138	156	176	176	194	218
AD	95	112	121	141	141	151	163
LB	205	231	260	283	313	345	383
LBZ	260	293	329	362	392	440	482
L [1]	448	474	503	526	556	588	626
LZ [1]	503	536	572	605	635	683	725
LD	103	103	103	136	136	136	136
R	86	86	86	106	106	106	106

163
83
274
FB14 88

[1] See also pages 89, 90.
For details about drive end **A** and **B** see page 41.

* options on request.
** both version with key

iO 473 SA

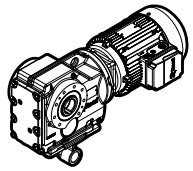

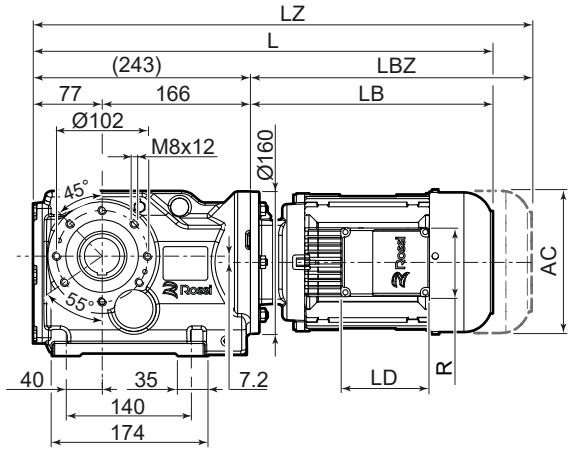

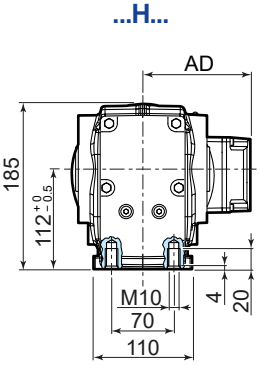

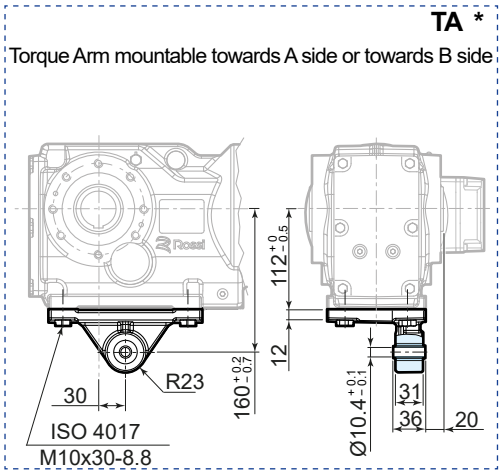

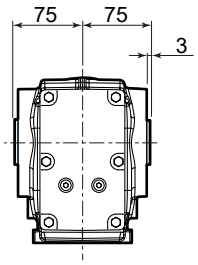

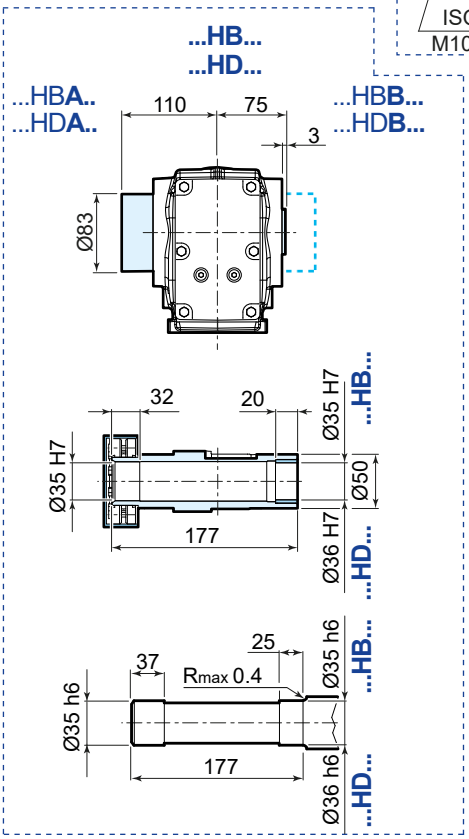

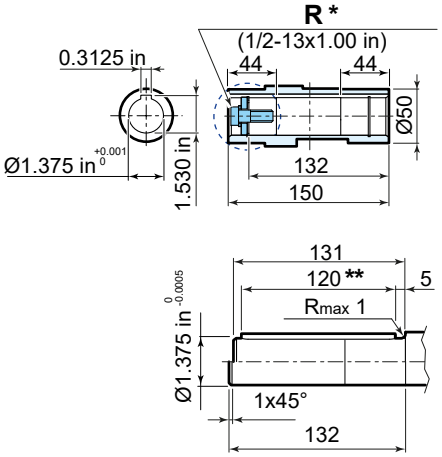

UT.C 2643

	63	71	80	90S	90L	100	112
AC	123	138	156	176	176	194	218
AD	95	112	121	141	141	151	163
LB	205	231	260	283	313	345	383
LBZ	260	293	329	362	392	440	482
L [1]	448	474	503	526	556	588	626
LZ [1]	503	536	572	605	635	683	725
LD	103	103	103	136	136	136	136
R	86	86	86	106	106	106	106

163
83
274

[1] See also pages 89, 90.
For details about drive end **A** and **B** see page 41.

* options on request.
** both version with key

12.3

iO 573 PA

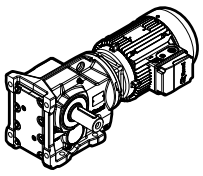

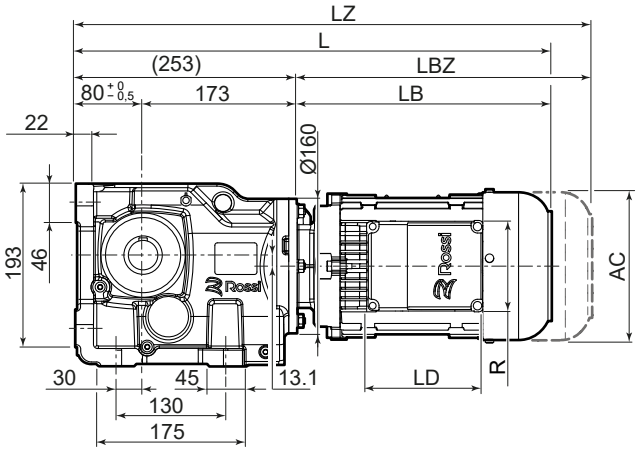

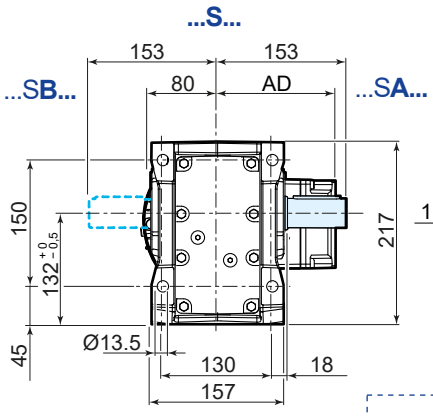

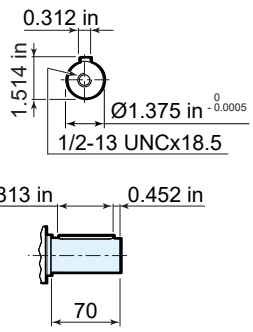

UT.C 2644

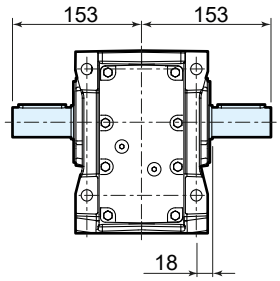

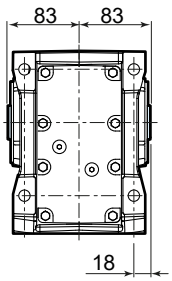

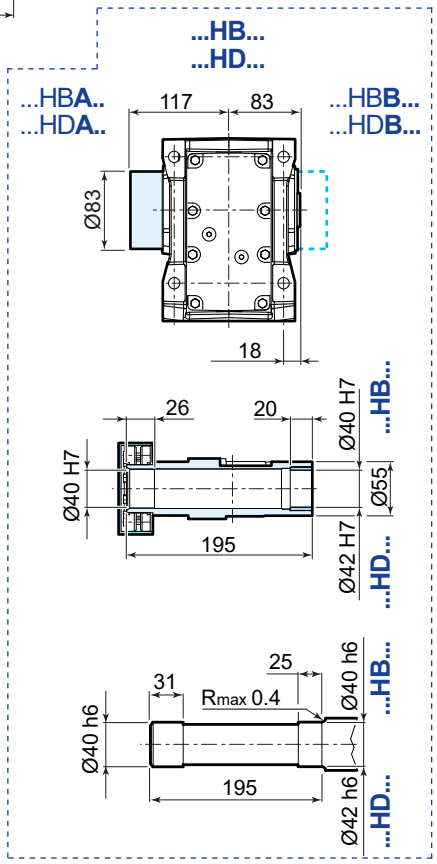

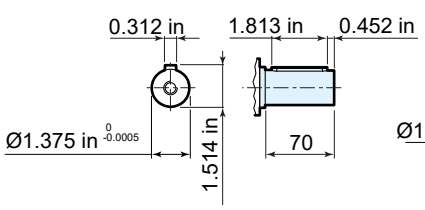

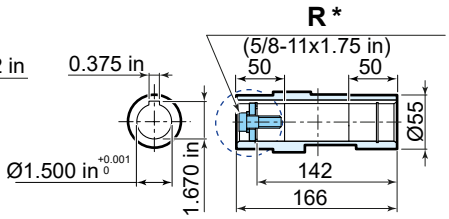

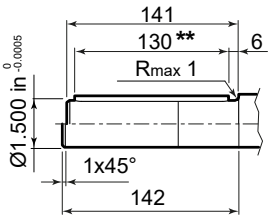

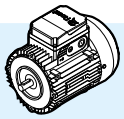

	63	71	80	90S [2]	90L	100	112	132S	132M
AC	123	138	156	176	176	194	218	257	257
AD	95	112	121	141	141	151	163	194	194
LB	205	231	260	283	313	345	383	439	499
LBZ	260	293	329	362	392	440	482	547	607
L [1]	458	484	513	536	566	598	636	692	752
LZ [1]	513	546	582	615	645	693	735	800	860
LD	103	103	103	136	136	136	136	190	190
R	86	86	86	106	106	106	106	148	148

163
83
274

[1] See also pages 89, 90.
For details about drive end **A** and **B** see page 41.
[2] The motor protrudes the gear reducer foot mounting surface.

* options on request.
** both version with key

Dimensional drawings - iO

iO 573 FA...F525

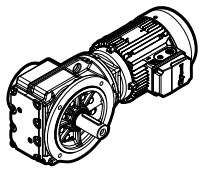

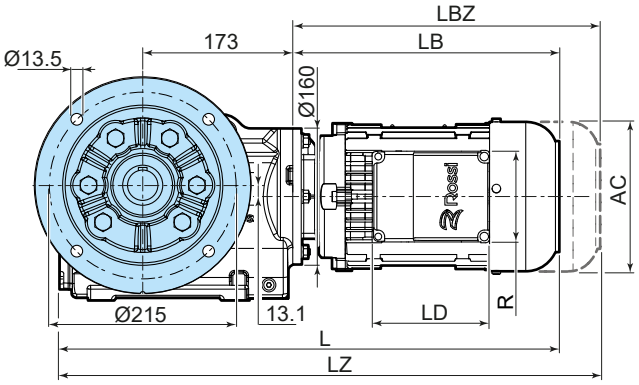

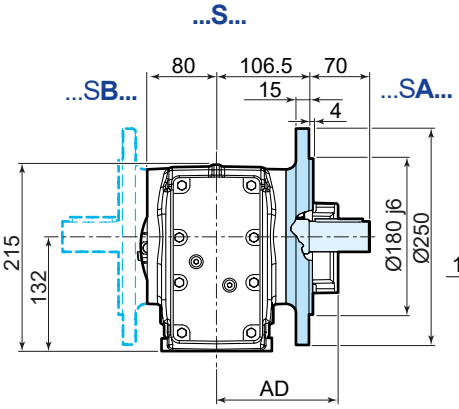

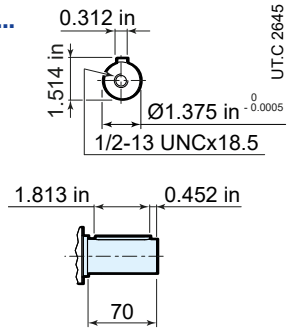

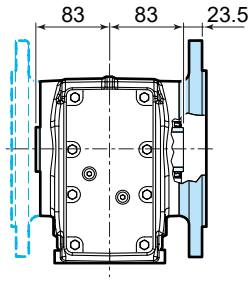

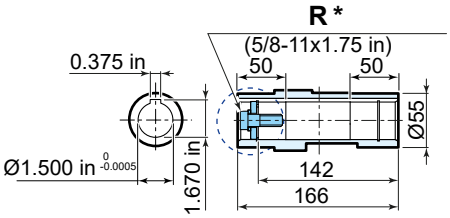

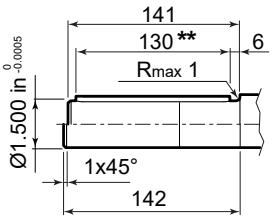

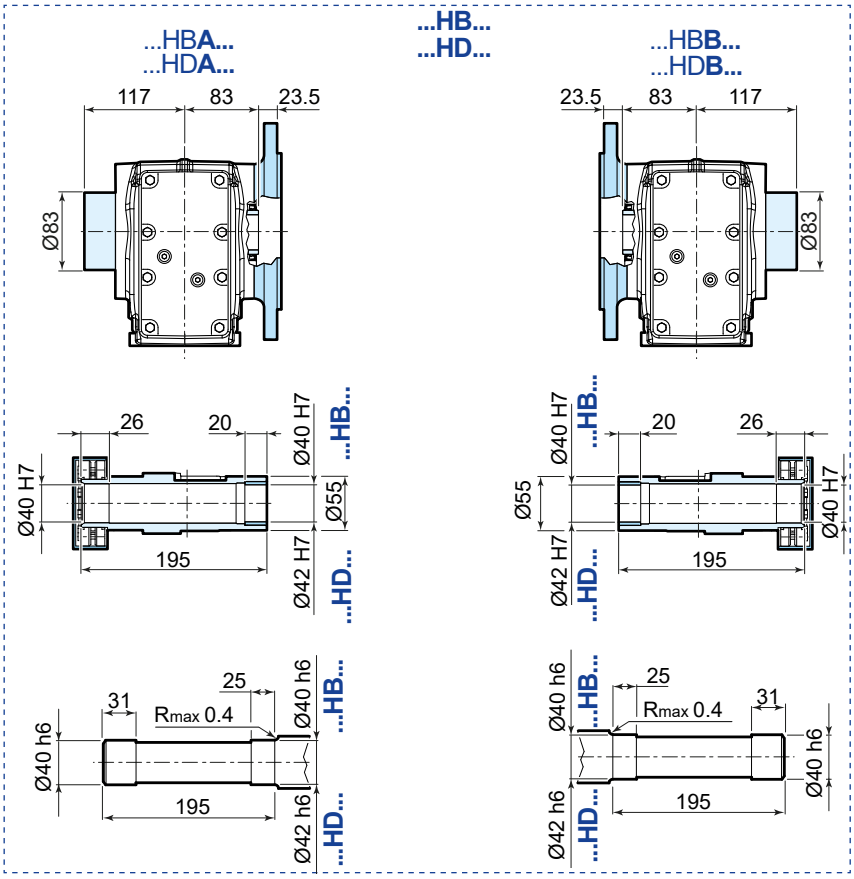

	63	71	80	90S	90L	100	112	132S	132M
AC	123	138	156	176	176	194	218	257	257
AD	95	112	121	141	141	151	163	194	194
LB	205	231	260	283	313	345	383	439	499
LBZ	260	293	329	362	392	440	482	547	607
L [1]	474	500	529	552	582	614	652	708	768
LZ [1]	529	562	598	631	661	709	751	816	876
LD	103	103	103	136	136	136	136	190	190
R	86	86	86	106	106	106	106	148	148

163
83
274
FB14 88

[1] See also pages 89, 90.
For details about drive end **A** and **B** see page 41.

* options on request.
** both version with key

iO 573 SA

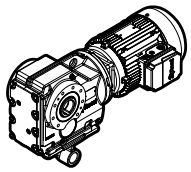

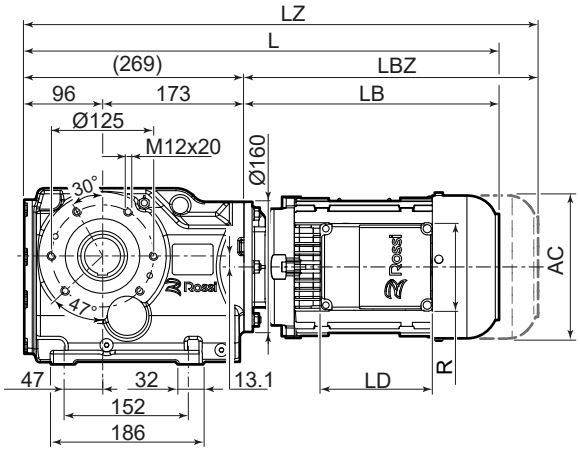

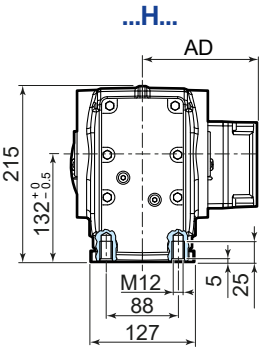

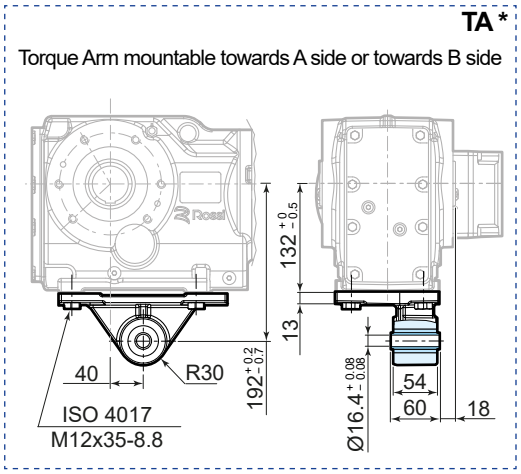

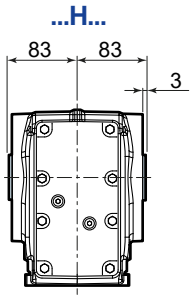

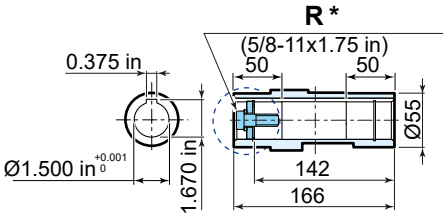

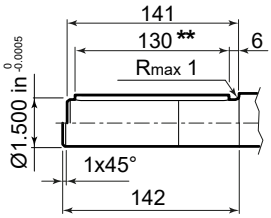

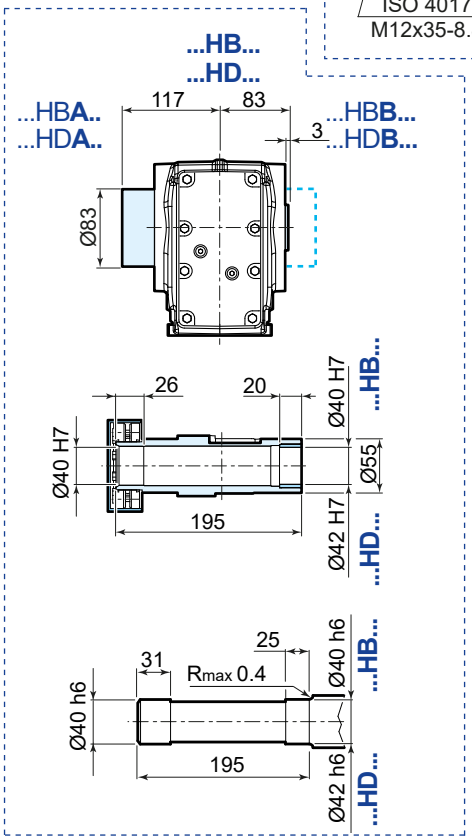

UT.C 2646

	63	71	80	90S	90L	100	112	132S	132M
AC	123	138	156	176	176	194	218	257	257
AD	95	112	121	141	141	151	163	194	194
LB	205	231	260	283	313	345	383	439	499
LBZ	260	293	329	362	392	440	482	547	607
L [1)]	474	500	529	552	582	614	652	708	768
LZ [1)]	529	562	598	631	661	709	751	816	876
LD	103	103	103	136	136	136	136	190	190
R	86	86	86	106	106	106	106	148	148

163
83
274

[1)] See also pages 89, 90.
For details about drive end **A** and **B** see page 41.

* options on request.
** both version with key

12.4

iO 673 PA

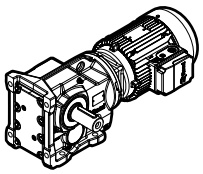

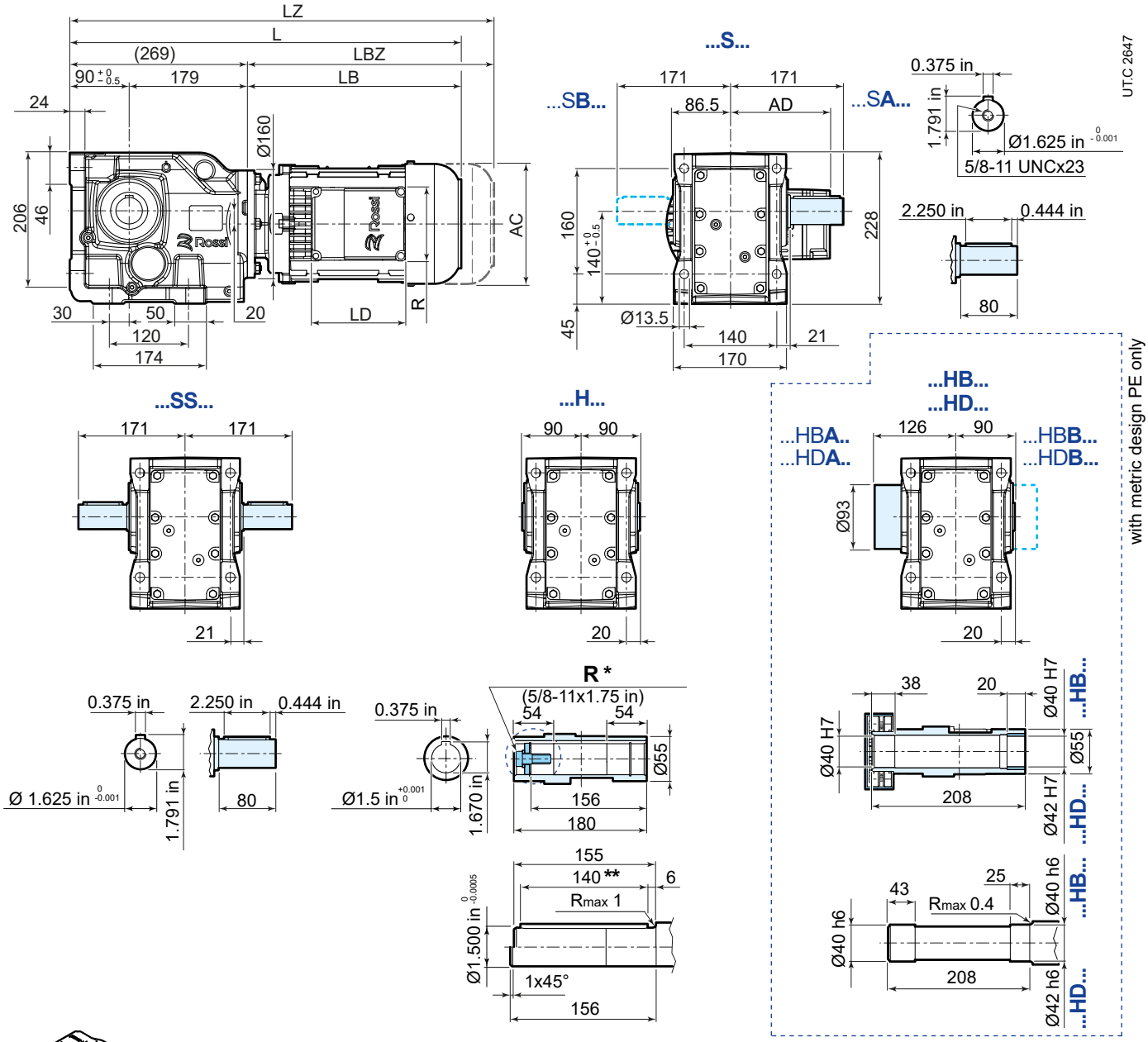

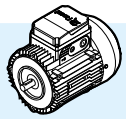

	63	71	80	90S [2]	90L	100	112	132S	132M
AC	123	138	156	176	176	194	218	257	257
AD	95	112	121	141	141	151	163	194	194
LB	205	231	260	283	313	345	383	439	499
LBZ	260	293	329	362	392	440	482	547	607
L [1]	474	500	529	552	582	614	652	708	768
LZ [1]	529	562	598	631	661	709	751	816	876
LD	103	103	103	136	136	136	136	190	190
R	86	86	86	106	106	106	106	148	148

163
83
274

[1] See also pages 89, 90.
For details about drive end **A** and **B** see page 41.
[2] The motor protrudes the gear reducer foot mounting surface.

* options on request.
** both version with key

iO 673 FA...F625

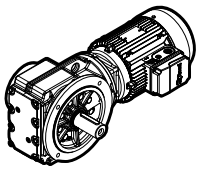

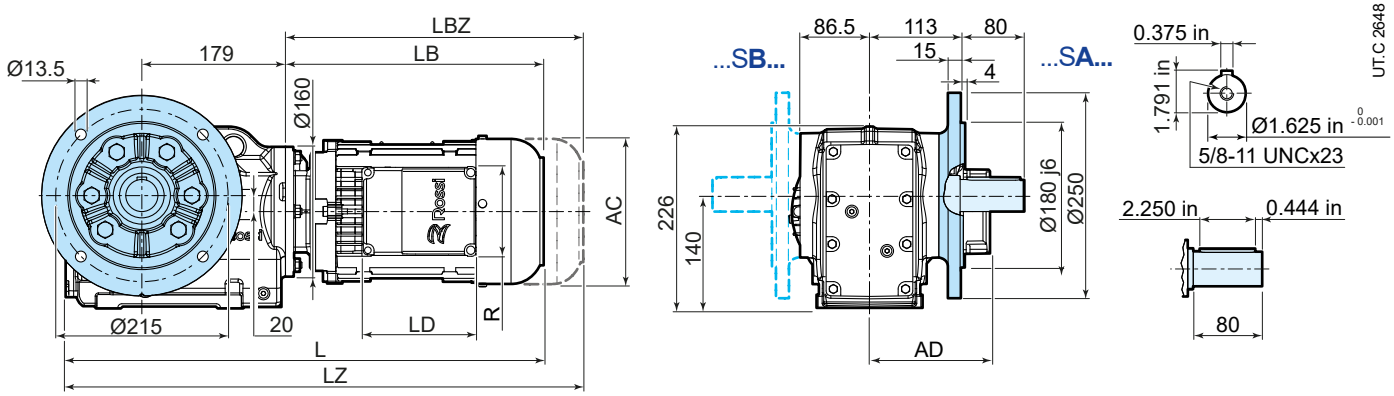

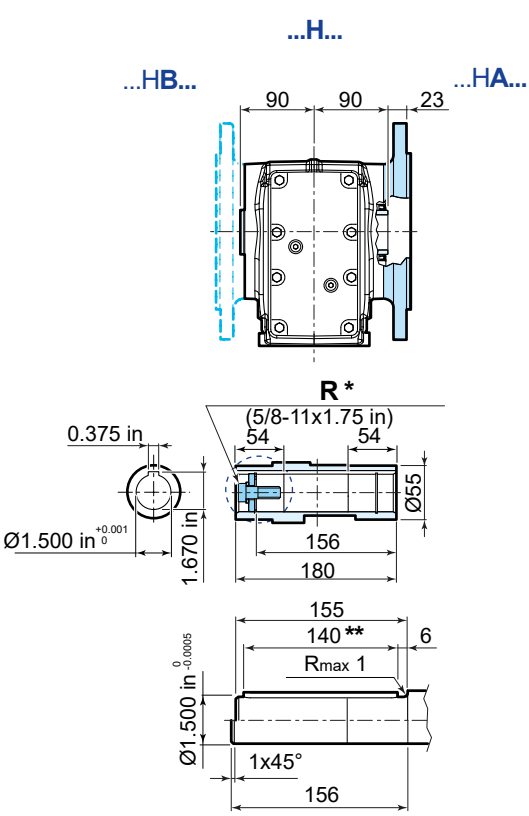

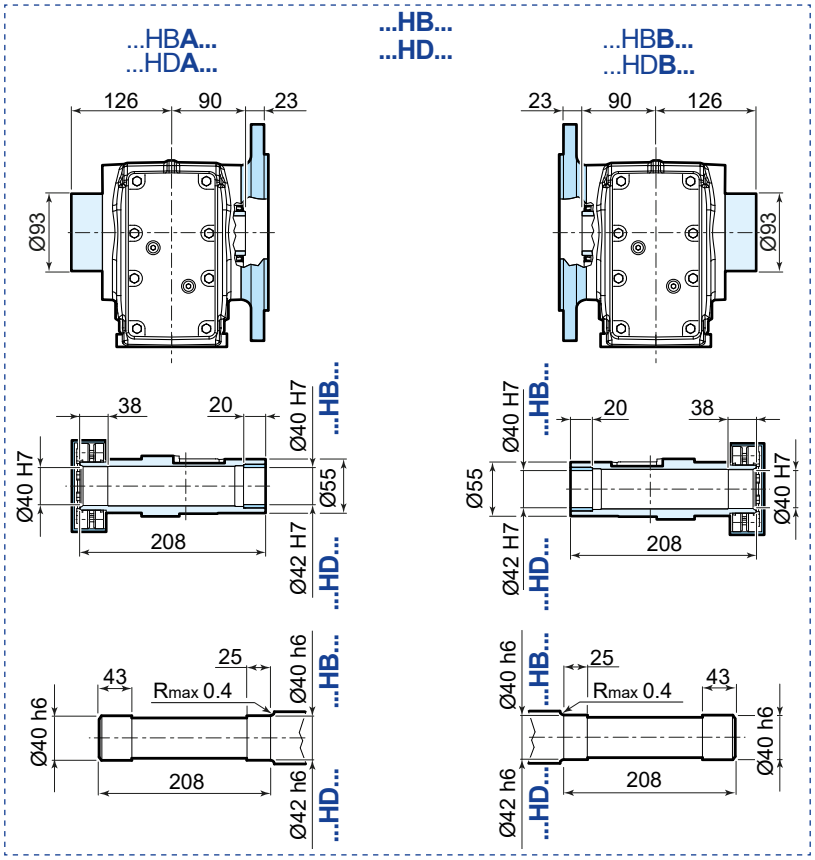

	63	71	80	90S	90L	100	112	132S	132M
AC	123	138	156	176	176	194	218	257	257
AD	95	112	121	141	141	151	163	194	194
LB	205	231	260	283	313	345	383	439	499
LBZ	260	293	329	362	392	440	482	547	607
L [1]	479	505	534	557	587	619	657	713	773
LZ [1]	534	567	603	636	666	714	756	821	881
LD	103	103	103	136	136	136	136	190	190
R	86	86	86	106	106	106	106	148	148

163
83
274
FB14 88

[1] See also pages 89, 90.
For details about drive end **A** and **B** see page 41.

* options on request.
** both version with key

iO 673 SA

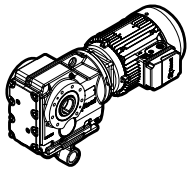

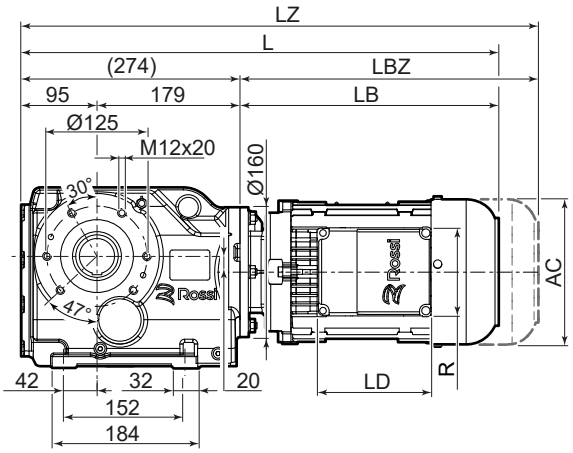

...H...

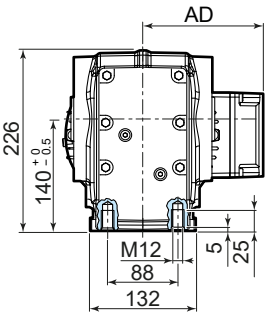

TA *

Torque Arm mountable towards A side or towards B side

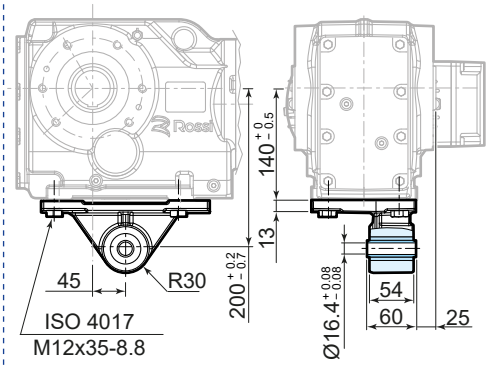

...H...

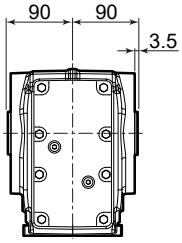

...HB...
...HD...

...HBA..
...HDA..

...HBB...
...HDB...

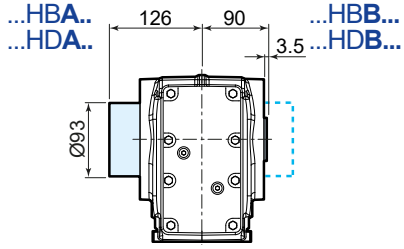

with metric design SE only

UT.C 2649

R *

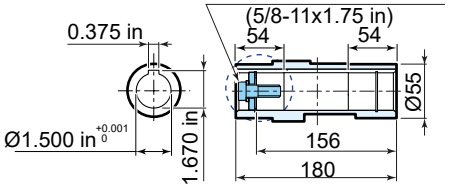

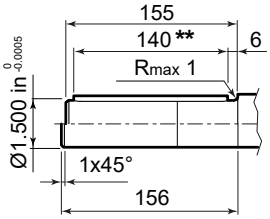

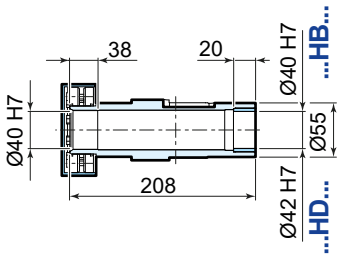

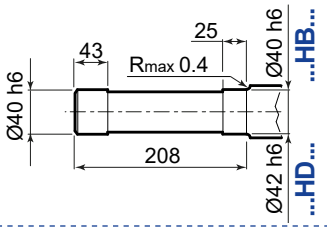

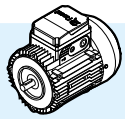

	63	71	80	90S	90L	100	112	132S	132M
AC	123	138	156	176	176	194	218	257	257
AD	95	112	121	141	141	151	163	194	194
LB	205	231	260	283	313	345	383	439	499
LBZ	260	293	329	362	392	440	482	547	607
L [1]	479	505	534	557	587	619	657	713	773
LZ [1]	534	567	603	636	666	714	756	821	881
LD	103	103	103	136	136	136	136	190	190
R	86	86	86	106	106	106	106	148	148

163
83
274

[1] See also pages 89, 90.
For details about drive end **A** and **B** see page 41.

* options on request.
** both version with key

12.5

iO 773 PA

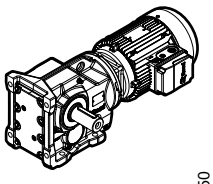

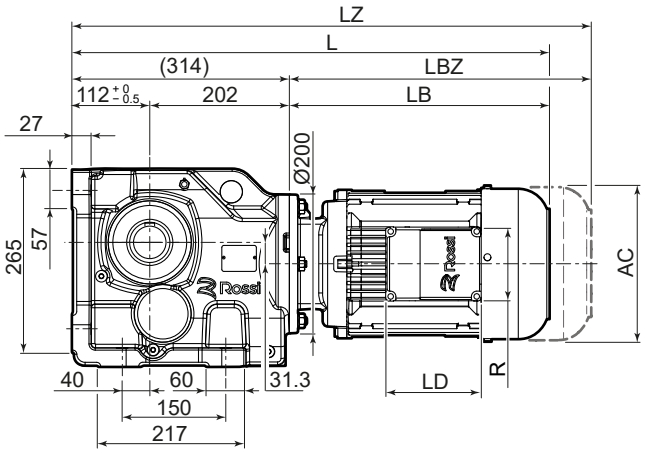

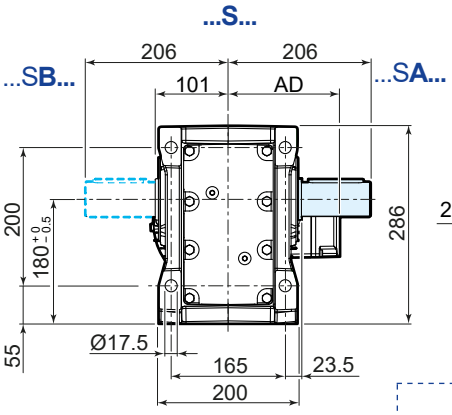

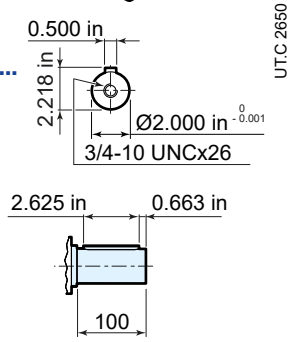

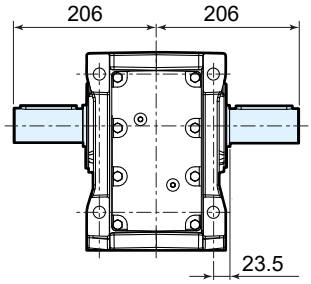

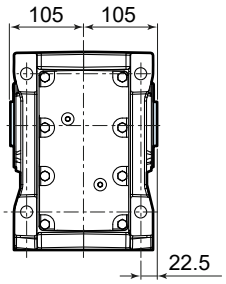

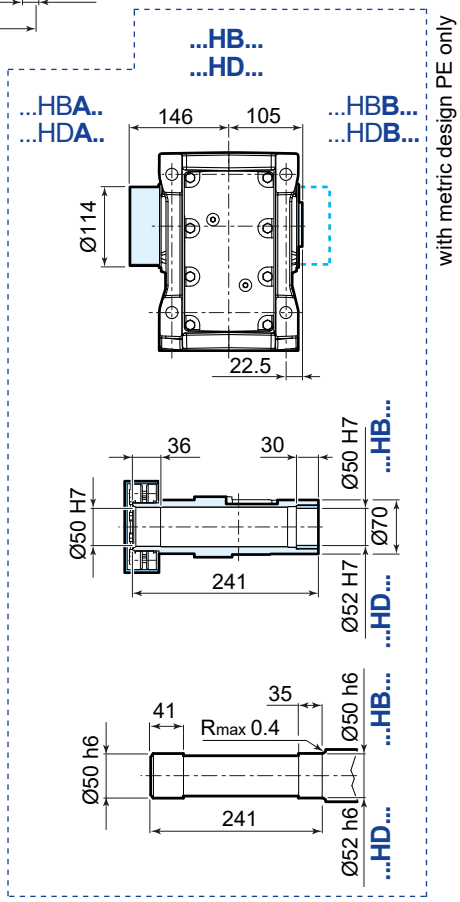

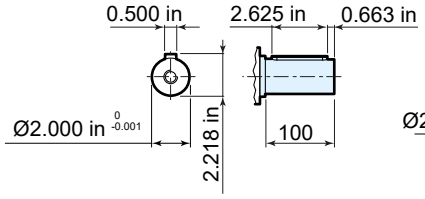

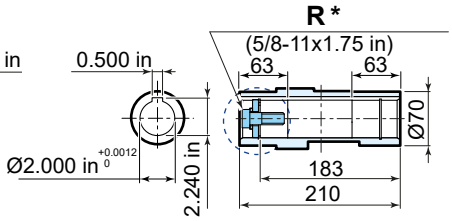

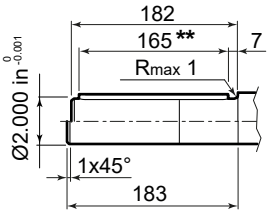

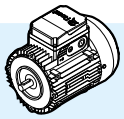

	63	71	80	90S	90L	100	112	132S	132M
AC	123	138	156	176	176	194	218	257	257
AD	95	112	121	141	141	151	163	194	194
LB	199	225	254	276	306	339	377	433	493
LBZ	254	287	323	355	385	434	476	541	601
L [1]	513	539	568	590	620	653	691	747	807
LZ [1]	568	601	637	669	699	748	790	855	915
LD	103	103	103	136	136	136	136	190	190
R	86	86	86	106	106	106	106	148	148

163
83
274

[1] See also pages 89, 90.
For details about drive end **A** and **B** see page 41.

* options on request.
** both version with key

iO 773 FA...F730

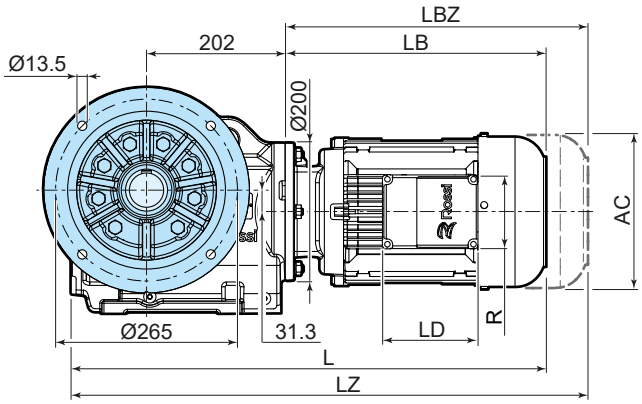

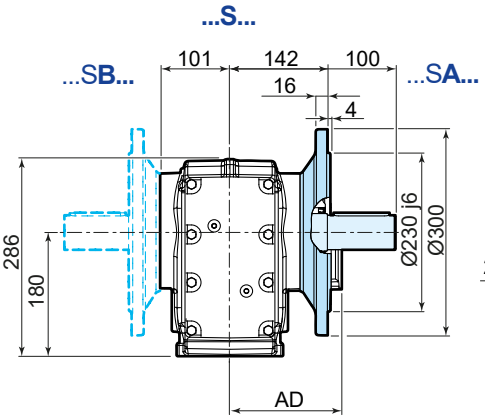

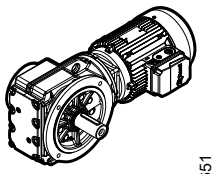

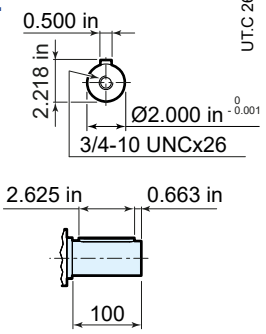

UTC 2651

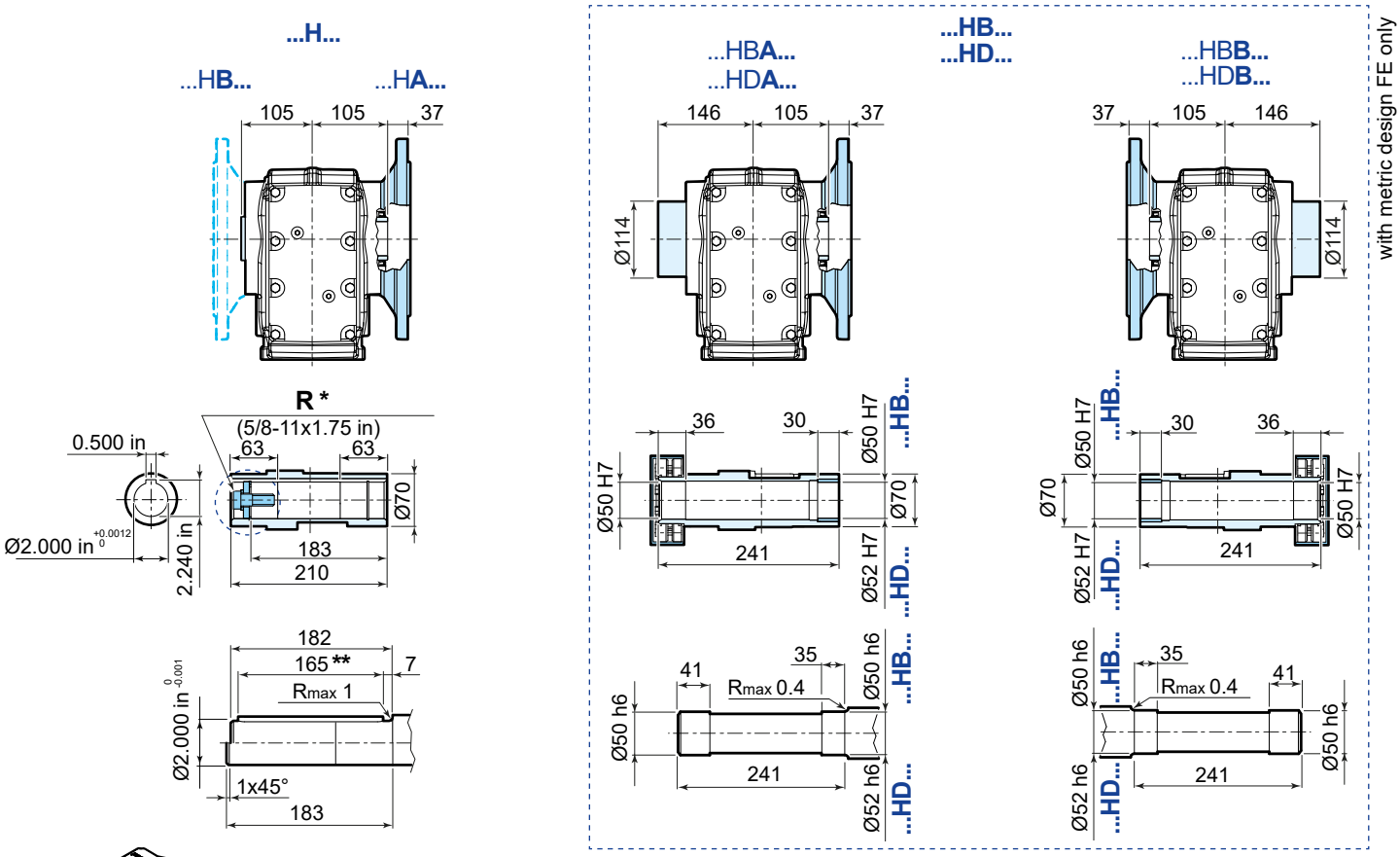

	63	71	80	90S	90L	100	112	132S	132M
AC	123	138	156	176	176	194	218	257	257
AD	95	112	121	141	141	151	163	194	194
LB	199	225	254	276	306	339	377	433	493
LBZ	254	287	323	355	385	434	476	541	601
L [1]	511,5	537,5	566,5	588,5	618,5	651,5	689,5	745,5	805,5
LZ [1]	566,5	599,5	635,5	667,5	697,5	746,5	788,5	853,5	913,5
LD	103	103	103	136	136	136	136	190	190
R	86	86	86	106	106	106	106	148	148

163
83
274
FB14 88

[1] See also pages 89, 90.
For details about drive end **A** and **B** see page 41.

* options on request.
** both version with key

iO 773 SA

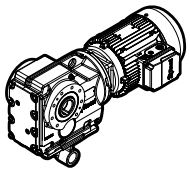

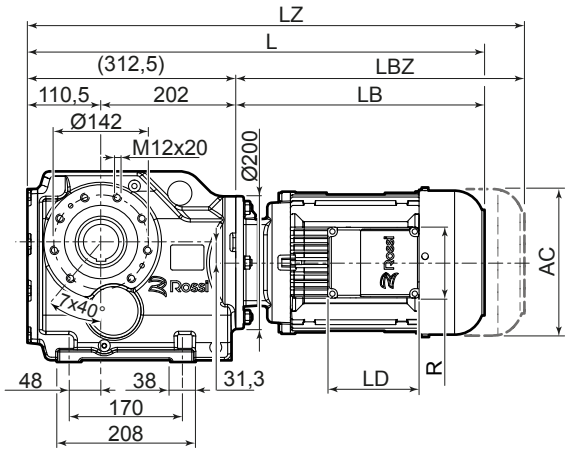

...H...

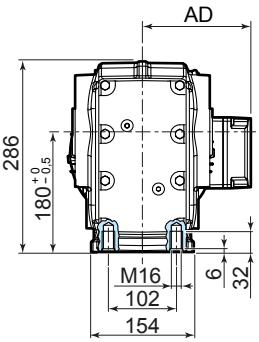

TA *

Torque Arm mountable towards A side or towards B side

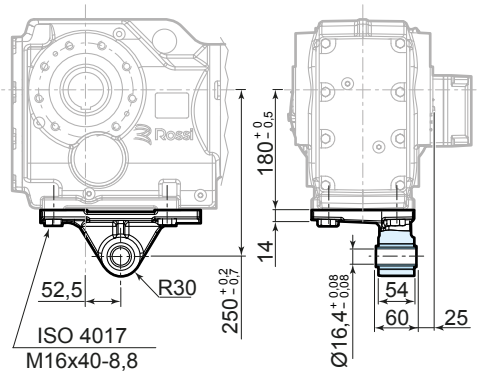

...H...

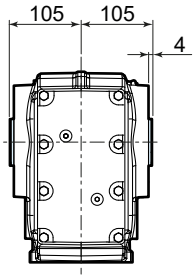

...HB...
...HD...

...HBA..
...HDA..

...HBB...
...HDB...

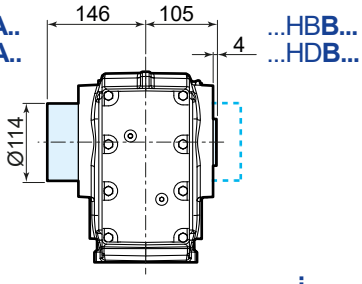

with metric design SE only

UT.C 2652

R *

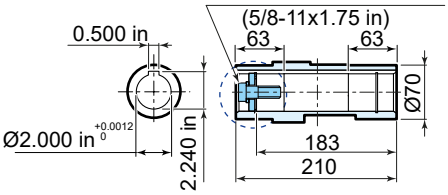

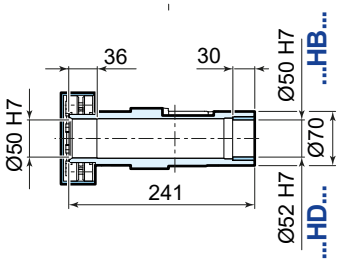

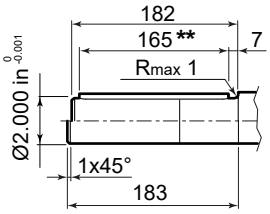

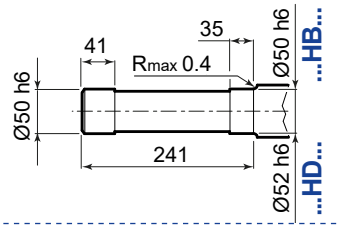

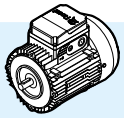

	63	71	80	90S	90L	100	112	132S	132M
AC	123	138	156	176	176	194	218	257	257
AD	95	112	121	141	141	151	163	194	194
LB	199	225	254	276	306	339	377	433	493
LBZ	254	287	323	355	385	434	476	541	601
L [1)]	511,5	537,5	566,5	588,5	618,5	651,5	689,5	745,5	805,5
LZ [1)]	566,5	599,5	635,5	667,5	697,5	746,5	788,5	853,5	913,5
LD	103	103	103	136	136	136	136	190	190
R	86	86	86	106	106	106	106	148	148

163

83

274

[1)] See also pages 89, 90.
For details about drive end **A** and **B** see page 41.

* options on request.
** both version with key

12.6

iO 873 PA

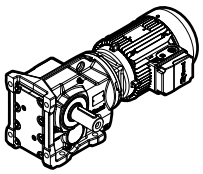

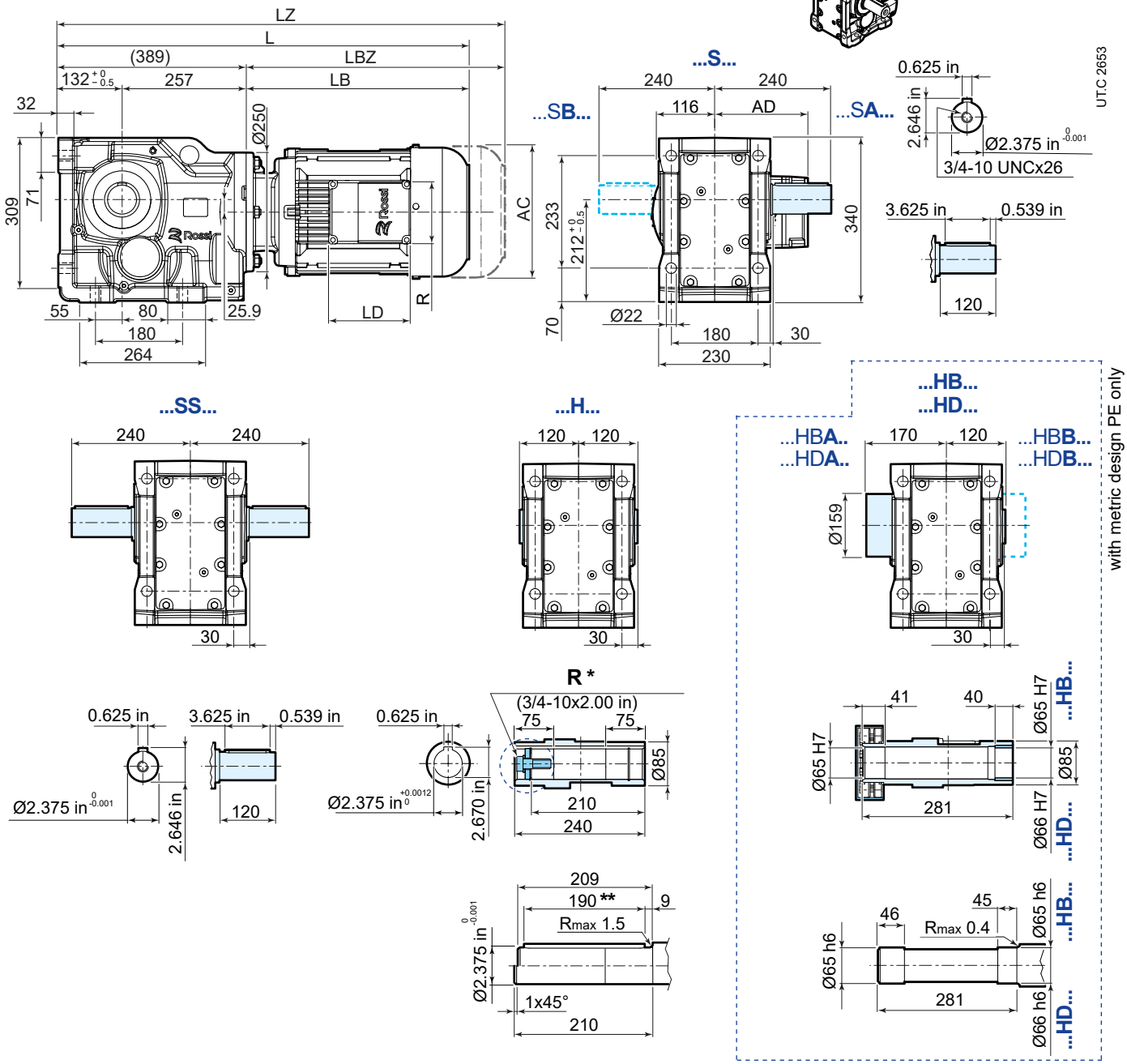

	80	90S	90L	100	112	132S	132M
AC	156	176	176	194	218	257	257
AD	121	141	141	151	163	194	194
LB	249	272	302	334	372	428	488
LBZ	318	351	381	429	471	536	596
L [1]	638	661	691	723	761	817	877
LZ [1]	707	740	770	818	860	925	985
LD	103	136	136	136	136	190	190
R	86	106	106	106	106	148	148

163

83

274

[1] See also pages 89, 90.
For details about drive end **A** and **B** see page 41.

* options on request.
** both version with key

iO 873 FA...F835

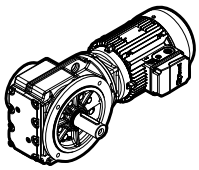

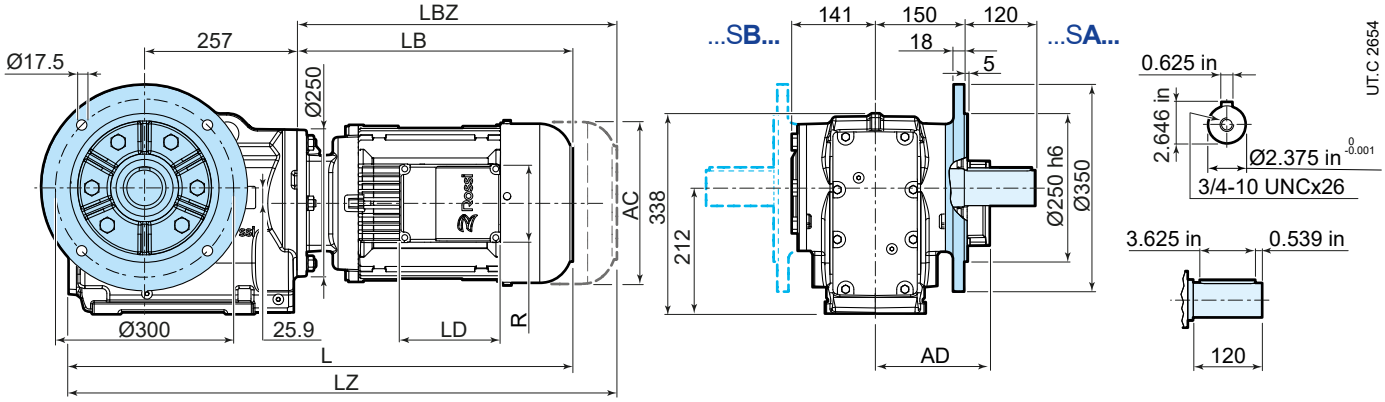

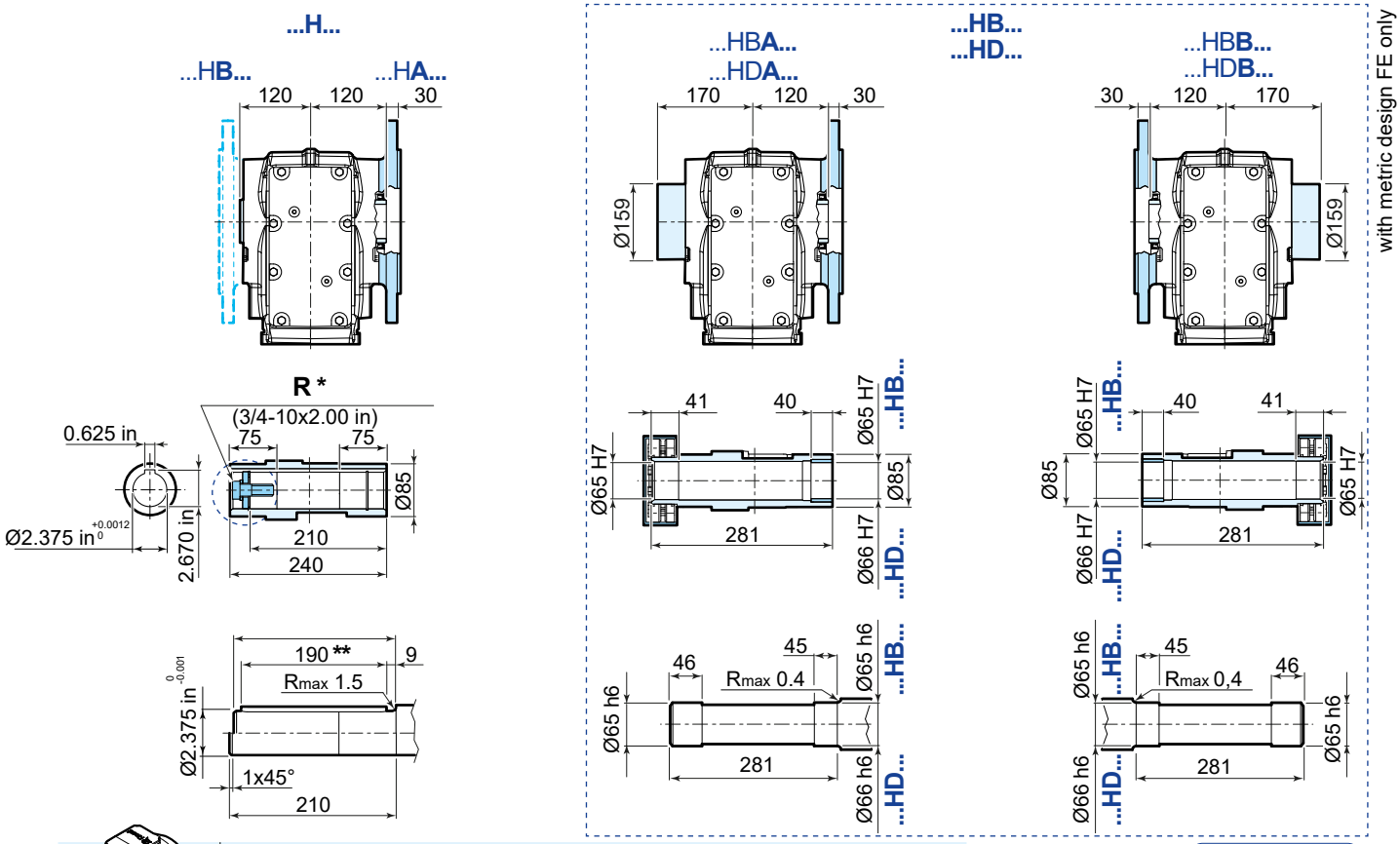

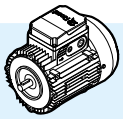

	80	90S	90L	100	112	132S	132M
AC	156	176	176	194	218	257	257
AD	121	141	141	151	163	194	194
LB	249	272	302	334	372	428	488
LBZ	318	351	381	429	471	536	596
L [1]	636	659	689	721	759	815	875
LZ [1]	705	738	768	816	858	923	983
LD	103	136	136	136	136	190	190
R	86	106	106	106	106	148	148

[1] See also pages 89, 90.
For details about drive end **A** and **B** see page 41.

163
83
274
FB14 88

* options on request.
** both version with key

iO 873 SA

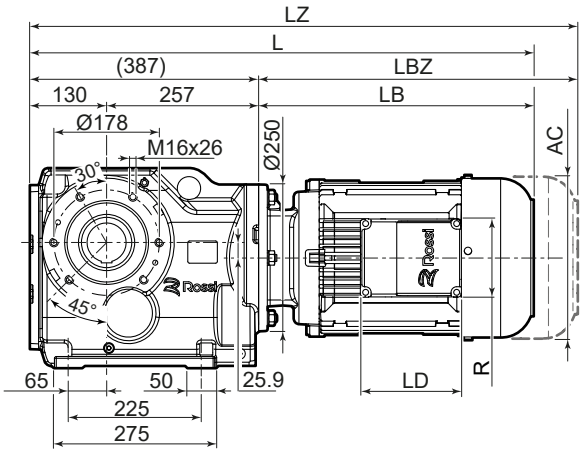

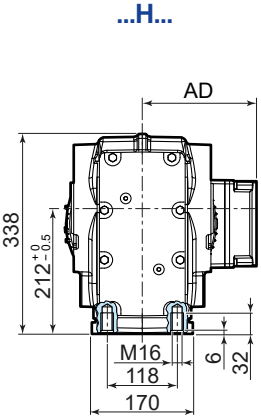

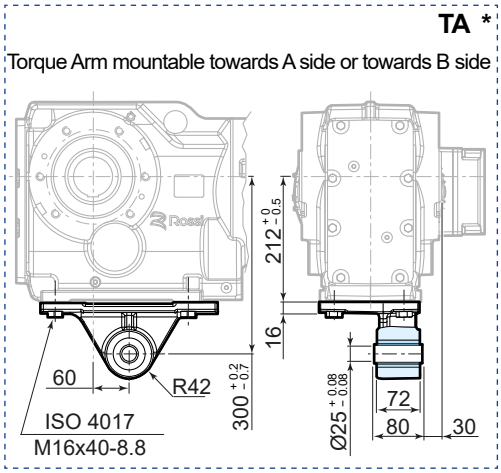

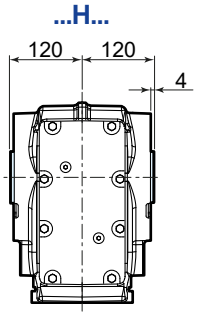

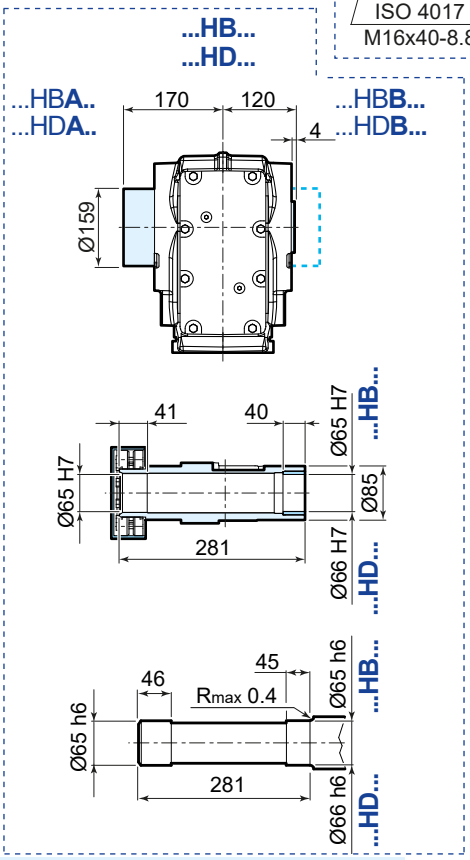

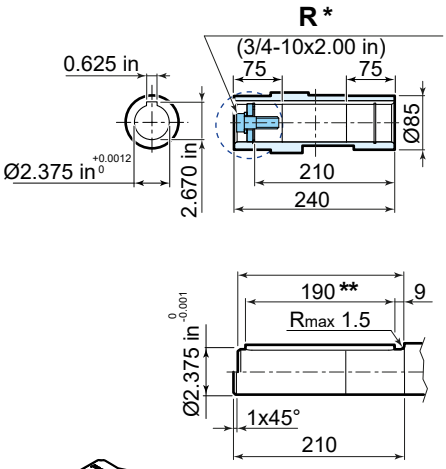

UT.C 2655

	80	90S	90L	100	112	132S	132M
AC	156	176	176	194	218	257	257
AD	121	141	141	151	163	194	194
LB	249	272	302	334	372	428	488
LBZ	318	351	381	429	471	536	596
L [1]	636	659	689	721	759	815	875
LZ [1]	705	738	768	816	858	923	983
LD	103	136	136	136	136	190	190
R	86	106	106	106	106	148	148

[1] See also pages 89, 90.
For details about drive end **A** and **B** see page 41.

163
83
274

* options on request.
** both version with key

12.7

iO 973 PA

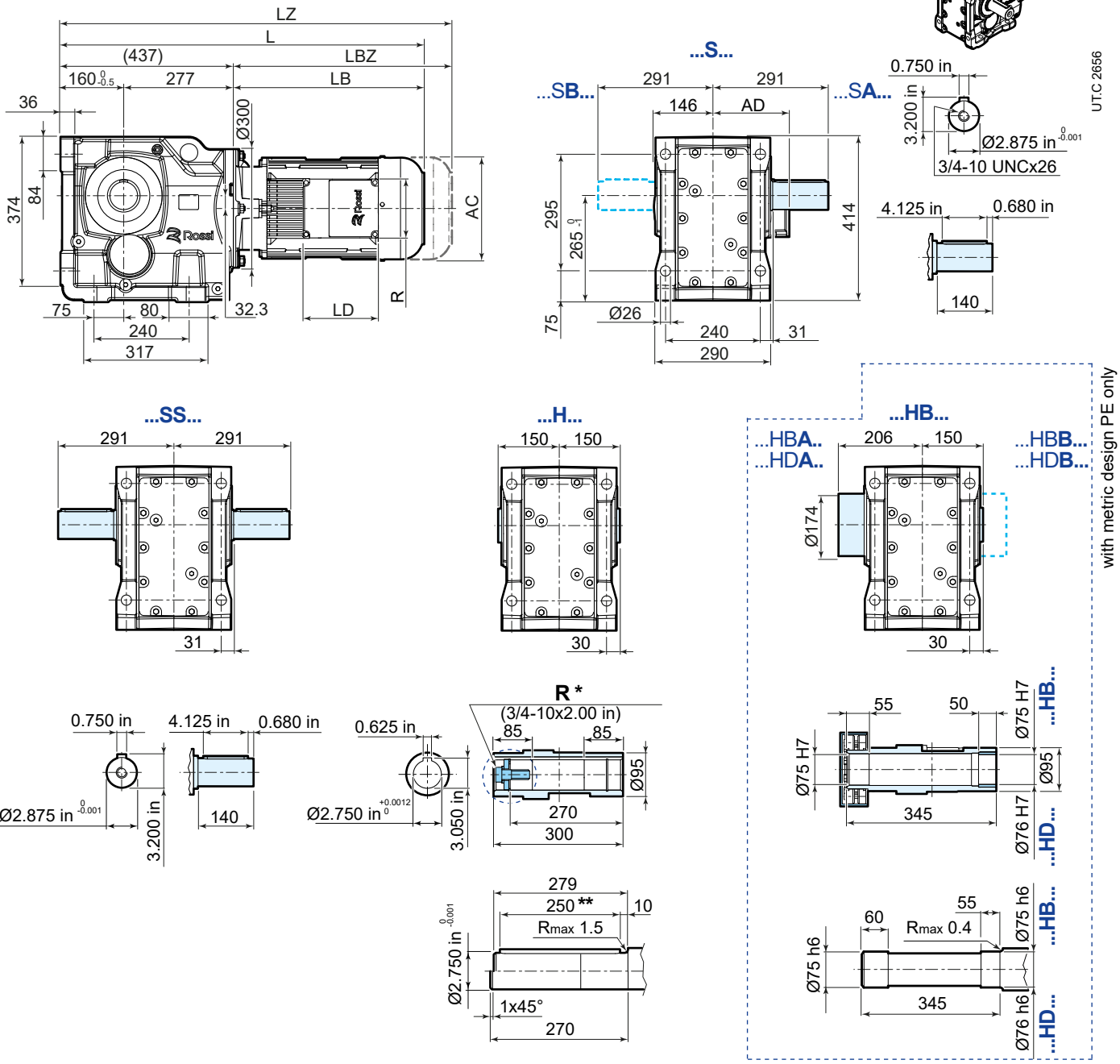

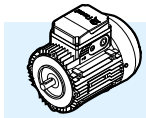

	80	90S	90L	100	112	132S	132M
AC	156	176	176	194	218	257	257
AD	121	141	141	151	163	194	194
LB	241	264	294	327	364	423	483
LBZ	310	343	373	422	463	531	591
L [1)]	678	701	731	764	801	860	920
LZ [1)]	747	780	810	859	900	968	1028
LD	103	136	136	136	136	190	190
R	86	106	106	106	106	148	148

163
83
274

[1)] See also pages 89, 90.
For details about drive end **A** and **B** see page 41.

* options on request.
** both version with key

iO 973 FA...F945

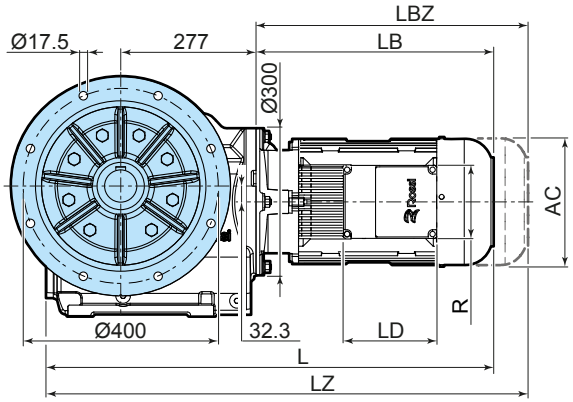

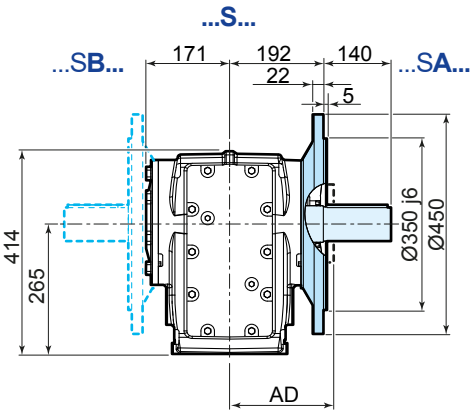

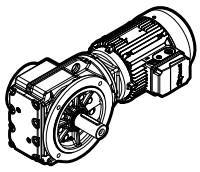

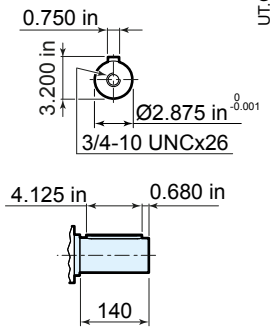

UT.C 2657

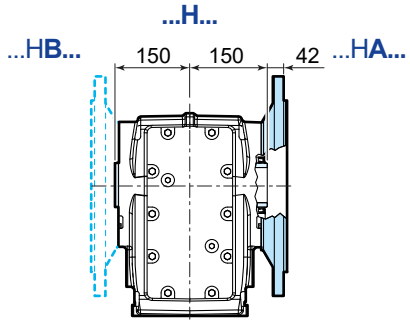

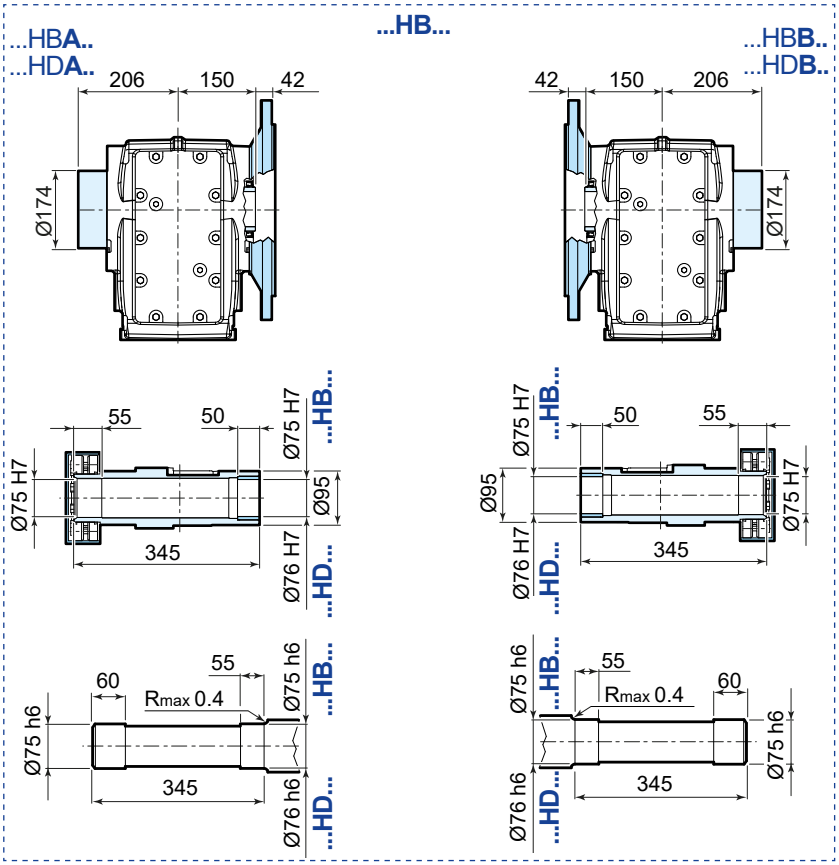

with metric design FE only

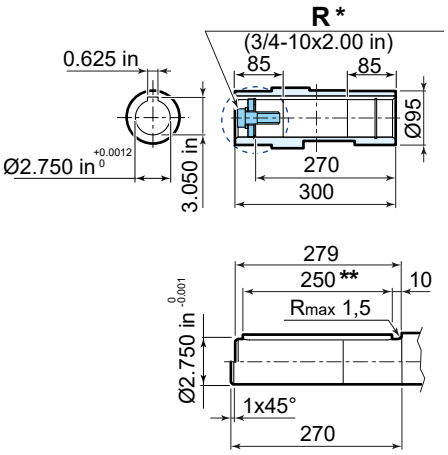

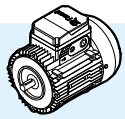

	80	90S	90L	100	112	132S	132M
AC	156	176	176	194	218	257	257
AD	121	141	141	151	163	194	194
LB	241	264	294	327	364	423	483
LBZ	310	343	373	422	463	531	591
L [1]	676	699	729	762	799	858	918
LZ [1]	745	778	808	857	898	966	1026
LD	103	136	136	136	136	190	190
R	86	106	106	106	106	148	148

[1] See also pages 89, 90.
For details about drive end **A** and **B** see page 41.

163
83
274
FB14 88

* options on request.
** both version with key

iO 973 SA

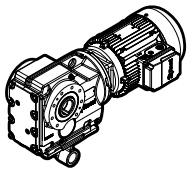

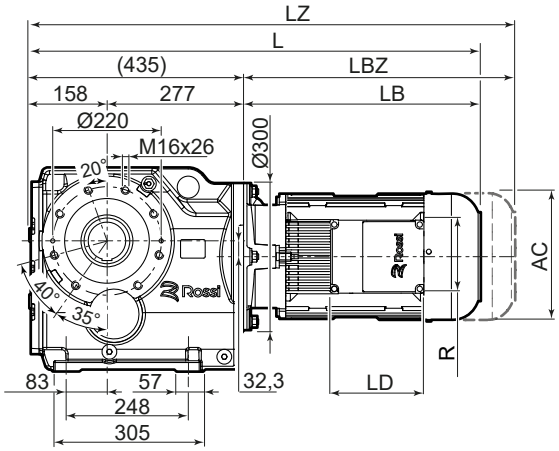

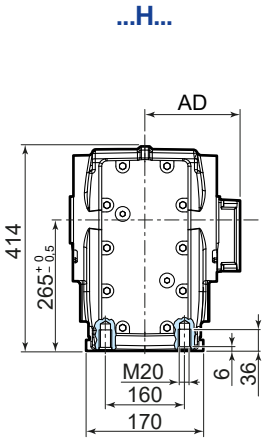

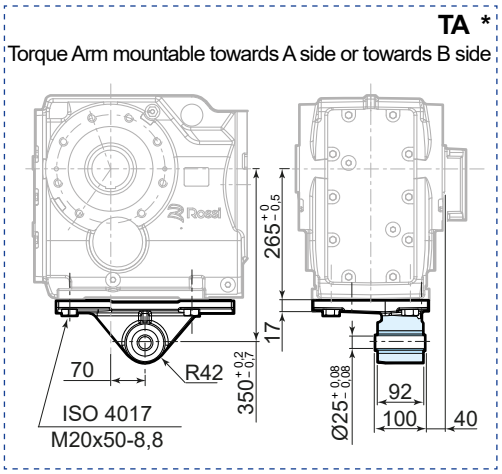

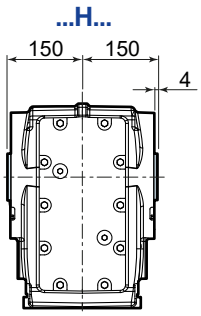

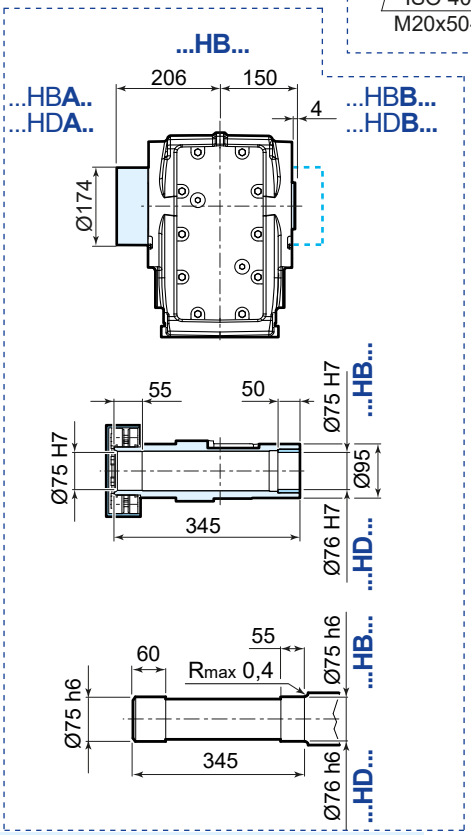

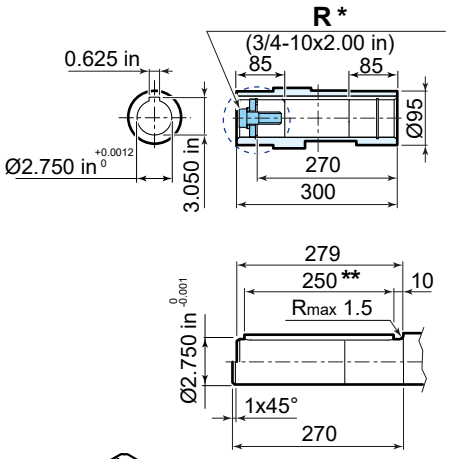

UT.C 2659

	80	90S	90L	100	112	132S	132M
AC	156	176	176	194	218	257	257
AD	121	141	141	151	163	194	194
LB	241	264	294	327	364	423	483
LBZ	310	343	373	422	463	531	591
L [1]	676	699	729	762	799	858	918
LZ [1]	745	778	808	857	898	966	1026
LD	103	136	136	136	136	190	190
R	86	106	106	106	106	148	148

163
83
274

[1] See also pages 89, 90.
For details about drive end **A** and **B** see page 41.

* options on request.
** both version with key

page intentionally left blank

13

Parallel shaft helical Selection tables - iP

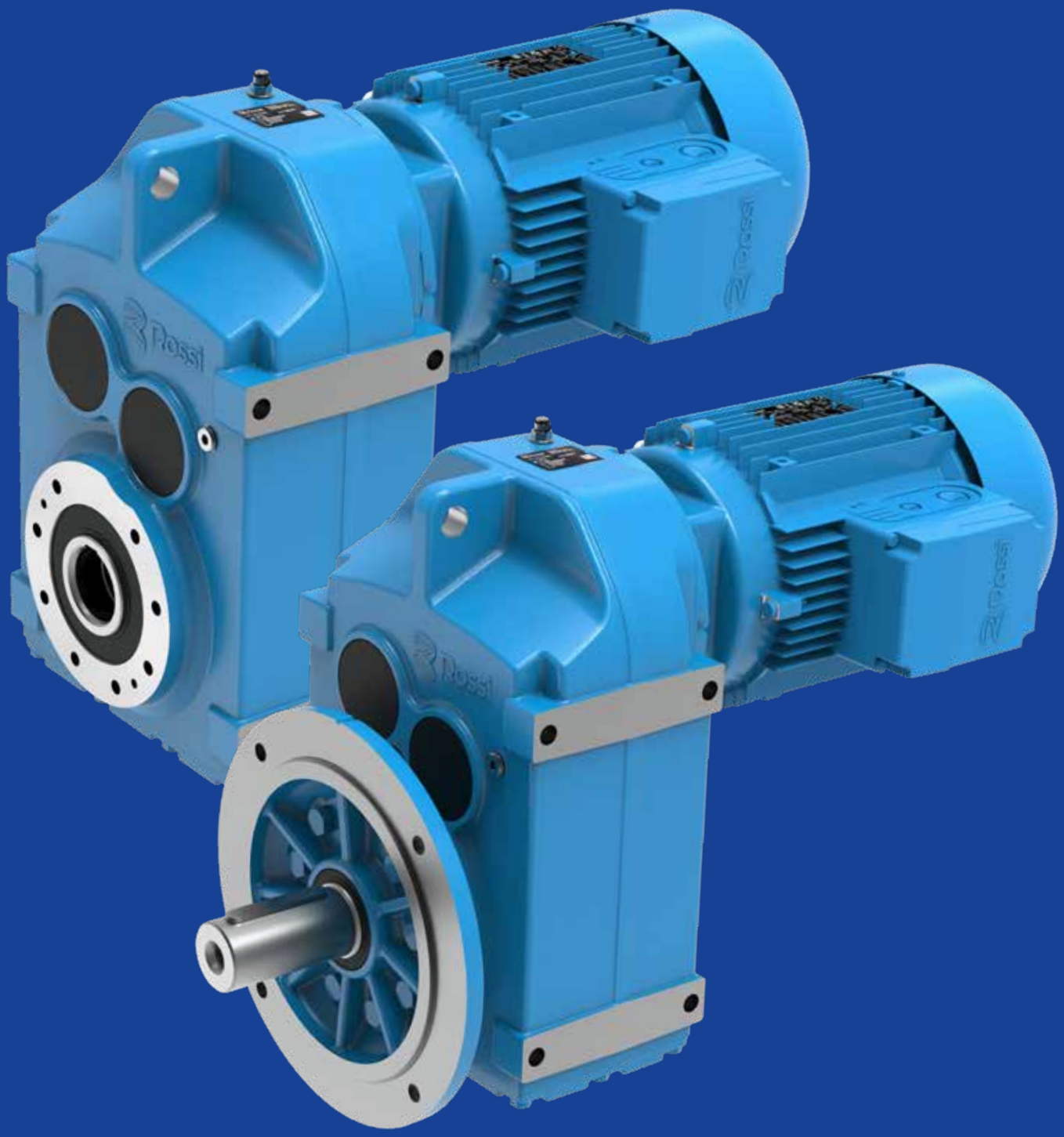

Section contents

9.1	Possible geometrical combinations	220
9.1.1	General	220
9.1.2	Key	220
9.2	Geometrical coupling tables	221
9.3	Selection tables [kW]	229

13.1

Possible geometrical combinations

13.1.1 General

The tables in the following pages show the geometrical coupling possibilities with HB 4 poles motors, according to train of gears (2 or 3 stages) and transmission ratio.
Also the low speed shaft rotation speed n_2 calculated according to a nominal input speed equal to n_1 = 1400 min^{-1}, are shown.
The values of the nominal torque at the low speed shaft M_{N2} and of the permissible radial load F_{r2} acting on the center line are also referred to this speed.

At the time of selection, it is necessary to evaluate the actual operating conditions in relation to the actual power of the applied motor as indicated in ch. 6.

13.1.2 Key

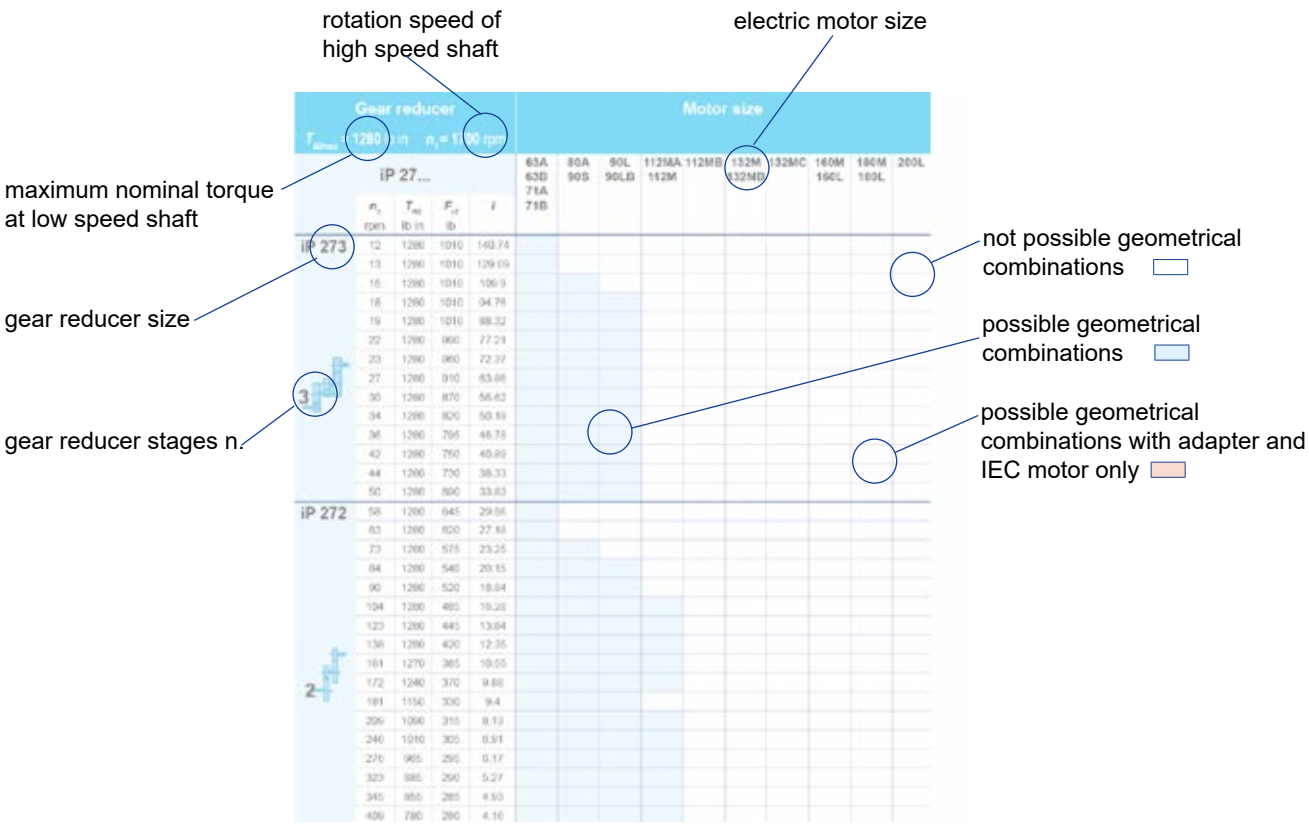

where

- n_2 low speed shaft rotation speed
- T_{N2} nominal torque at low speed shaft
- F_{r2} permissible radial load acting on center line of low speed shaft
  (at speed n_2 and with torque T_{N2} indicated in the table - valid only for foot mounted gearmotor design)
- i transmission ratio

Gear reducer T_{N2max} = 1280 lb in n_1 = 1700 rpm					Motor size									
iP 27...	n_2 rpm	T_{N2} lb in	F_{r2} lb	i	63A 63B 71A 71B	80A 90S	90L 90LB	112MA 112M	112MB	132M 132MB	132MC	160M 160L	180M 180L	200L
iP 273	12	1280	1010	140.74										
	13	1280	1010	129.09										
	15	1280	1010	109.9										
	18	1280	1010	94.76										
	19	1280	1010	88.32										
	22	1280	990	77.21										
	23	1280	960	72.37										
	27	1280	910	63.86										
3	30	1280	870	56.62										
	34	1280	820	50.19										
	36	1280	795	46.78										
	42	1280	750	40.89										
	44	1280	730	38.33										
	50	1280	690	33.83										
iP 272	58	1280	645	29.56										
	63	1280	620	27.18										
	73	1280	575	23.25										
	84	1280	540	20.15										
	90	1280	520	18.84										
	104	1280	485	16.28										
	123	1280	445	13.84										
	138	1280	420	12.35										
	161	1270	385	10.55										
2	172	1240	370	9.88										
	181	1150	330	9.4										
	209	1090	315	8.13										
	246	1010	305	6.91										
	276	965	295	6.17										
	323	885	290	5.27										
	345	855	285	4.93										
	409	780	280	4.16										

Gear reducer T_{N2max} = 1980 lb in n_1 = 1700 rpm					Motor size									
iP 37...	n_2 rpm	T_{N2} lb in	F_{r2} lb	i	63A 63B 71A 71B	80A 90S	90L 90LB	112MA 112M	112MB	132M 132MB	132MC	160M 160L	180M 180L	200L
iP 373	13	1980	960	128.51										
	14	1980	960	117.88										
	17	1980	960	100.36										
	20	1980	960	86.53										
	21	1980	960	80.65										
	24	1980	960	70.5										
	26	1980	960	66.09										
	29	1980	960	58.32										
3 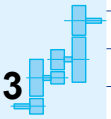	31	1980	960	54.54										
	33	1980	960	51.7										
	36	1980	960	47.02										
	39	1980	960	43.83										
	44	1980	960	38.31										
	47	1980	930	35.91										
	54	1980	880	31.69										
	61	1980	830	28.09										
	71	1980	770	23.88										
iP 372	72	1980	765	23.63										
	83	1980	715	20.57										
	88	1980	690	19.27										
	100	1980	645	17.03										
	108	1980	625	15.81										
	119	1980	590	14.33										
	132	1940	555	12.87										
	153	1820	530	11.08										
	163	1770	520	10.42										
2	190	1660	500	8.97										
	212	1570	475	8.01										
	228	1310	475	7.44										
	252	1260	460	6.74										
	281	1200	445	6.05										
	326	1120	430	5.21										
	347	1090	425	4.9										
	403	1010	415	4.22										
	451	955	400	3.77										

Gear reducer T_{N2max} = 3980 lb in n_1 = 1700 rpm					Motor size									
iP 47...	n_2 rpm	T_{N2} lb in	F_{r2} lb	i	63A 63B 71A 71B	80A 90S	90L 90LB	112MA 112M	112MB	132M 132MB	132MC	160M 160L	180M 180L	200L
iP 473	8.9	3980	1330	190.76										
	9.7	3980	1330	175.38										
	11	3980	1330	150.06										
	13	3980	1330	130.07										
	14	3980	1330	121.57										
	16	3980	1330	105.09										
	19	3980	1330	89.29										
	21	3980	1330	79.72										
3	25	3980	1330	68.09										
	26	3980	1330	65.36										
	30	3980	1330	56.49										
	35	3980	1330	48 (1)										
	40	3980	1330	42.86										
	46	3980	1330	36.61										
	50	3980	1290	34.29										
	59	3980	1180	28.88										
iP 472	55	3980	1220	30.86										
	58	3980	1190	29.32										
	66	3980	1110	25.72										
	78	3980	1020	21.82										
	86	3980	970	19.7										
	98	3980	900	17.33										
	104	3980	870	16.36										
	122	3980	795	13.93										
2	134	3980	750	12.66										
	155	3980	685	10.97										
	190	3230	650	8.96										
	216	3760	515	7.88										
	228	3760	490	7.44 (1)										
	268	3430	485	6.34										
	295	3320	465	5.76										
	341	3130	450	4.99										

(1) Finite transmission ratio *i*

Gear reducer T_{N2max} = 5840 lb in n_1 = 1700 rpm					Motor size									
iP 57...					63A 63B 71A 71B	80A 90S	90L 90LB	112MA 112M	112MB	132M 132MB	132MC	160M 160L	180M 180L	200L
	n_2 rpm	T_{N2} lb in	F_{r2} lb	i										
iP 573	8.5	5840	2070	199.7										
	9.3	5760	2070	183.6										
	11	5720	2070	157.09										
	12	5690	2070	136.16										
	13	5680	2070	127.27										
	15	5650	2070	110.01										
	18	5620	2070	93.47										
	20	5600	2070	83.46										
3	23	5580	2070	72.98										
	25	5570	2070	68.22										
	29	5540	2070	58.97										
	34	5510	1980	50.1										
	38	5490	1880	44.73										
	44	5310	1740	38.21										
	47	5310	1690	35.79										
	56	5220	1560	30.15										
iP 572	42	2880	2200	40.13										
	50	4560	1780	34.24										
	57	5130	1620	29.94										
	60	4960	1590	28.45										
	68	5390	1440	24.96										
	80	5370	1290	21.17										
	89	5350	1220	19.11										
	101	5330	1130	16.81										
	107	5320	1100	15.88										
2	126	5310	1000	13.52										
	138	5310	940	12.29										
	160	5310	860	10.64										
	183	3870	960	9.31										
	208	3980	900	8.19										
	220	3980	870	7.73										
	258	4200	790	6.58										
	284	3980	745	5.98										
	328	4090	690	5.18										

Gear reducer T_{N2max} = 7970 lb in n_1 = 1700 rpm					Motor size									
iP 67...	n_2 rpm	T_{N2} lb in	F_{r2} lb	i	63A 63B 71A 71B	80A 90S	90L 90LB	112MA 112M	112MB	132M 132MB	132MC	160M 160L	180M 180L	200L
iP 673	7.4	7970	2320	228.99										
	8.7	7770	2320	195.39										
	10	7680	2320	170.85										
	10	7670	2320	162.31										
	12	7640	2320	142.4										
	14	7600	2320	120.79										
	16	7570	2320	109.04										
	18	7540	2320	95.94										
3 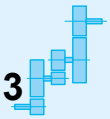	19	7530	2320	90.59										
	21	7500	2320	79.76										
	25	7460	2320	67.65										
	28	7430	2320	61.07										
	32	7410	2320	53.73										
	34	7390	2320	50.74										
	39	7350	2320	43.2										
	43	7330	2390	39.26										
	50	7010	2470	34.01										
iP 672	47	7310	2320	36.3										
	53	7290	2320	32.08										
	62	7260	2320	27.41										
	68	7260	2320	25.13										
	77	7260	2320	22.05										
	81	7260	2320	20.9 (1)										
	93	7260	2320	18.29										
	103	7260	2320	16.48										
	118	7260	2320	14.46										
	133	7260	2320	12.76										
2	150	7260	2320	11.31										
	176	7260	2240	9.66										
	187	5310	2370	9.08										
	198	5580	2270	8.6										
	226	6110	2100	7.53										
	251	6110	2000	6.78										
	286	6110	1910	5.95										
	324	5800	1830	5.25										
	365	5460	1780	4.66										
	428	4960	1740	3.97										

(1) Finite transmission ratio *i*

Gear reducer T_{N2max} = 15000 lb in n_1 = 1700 rpm					Motor size									
iP 77...	n_2 rpm	T_{N2} lb in	F_{r2} lb	i	63A 63B 71A 71B	80A 90S	90L 90LB	112MA 112M	112MB	132M 132MB	132MC	160M 160L	180M 180L	200L
iP 773	6	15000	3530	281.71										
	6.5	15000	3530	262.93										
	7.5	15000	3530	225.79										
	8.6	15000	3530	198.31										
	9	15000	3530	188.4										
	10	15000	3530	166.47										
	12	15000	3530	142.27										
	13	15000	3530	130.42										
	15	15000	3530	114.45										
	16	15000	3530	108.46 (1)										
	18	15000	3530	94.93										
3	20	15000	3530	85.52										
	23	15000	3530	75.02										
	23	15000	3530	72.5										
	26	15000	3530	66.46										
	29	15000	3530	58.32										
	31	15000	3530	55.27										
	35	15000	3530	48.37										
	39	14800	3530	43.58										
	44	14200	3530	38.23										
	50	13600	3530	33.74										
	57	13300	3530	29.91										
	67	12800	3610	25.54										
iP 772	46	11100	4010	36.58										
	54	13700	3700	31.51										
	59	14200	3640	28.75										
	67	15000	3530	25.5 (1)										
	79	15000	3530	21.43										
	86	15000	3530	19.7										
	97	15000	3530	17.49										
	109	15000	3420	15.64 (1)										
	121	15000	3280	14.06										
2	139	15000	3090	12.2										
	156	15000	2950	10.93										
	183	10800	2860	9.3										
	206	10800	2720	8.26										
	230	10800	2590	7.39										
	256	10800	2470	6.64										
	295	10800	2320	5.76										
	329	10100	2210	5.16										
	397	8980	2100	4.28										

(1) Finite transmission ratio *i*

Gear reducer T_{N2max} = 29600 lb in n_1 = 1700 rpm					Motor size									
iP 87...	n_2 rpm	T_{N2} lb in	F_{r2} lb	i	63A 63B 71A 71B	80A 90S	90L 90LB	112MA 112M	112MB	132M 132MB	132MC	160M 160L	180M 180L	200L
iP 873	6.3	29600	4450	270.68										
	6.7	29600	4450	255.37										
	7.4	29600	4450	228.93										
	8.6	29600	4450	197.2										
	9.4	29600	4450	179.97										
	11	29600	4450	159.61										
	13	29600	4450	134.16										
	14	29600	4450	123.29										
3 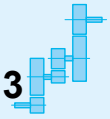	16	29600	4450	109.49										
	17	29600	4450	97.89										
	19	29600	4450	88.01										
	22	29600	4200	76.39										
	25	29600	3960	68.4										
	30	29600	3560	56.75										
	34	28000	3370	50.36										
	38	27100	3270	45.28										
	43	26000	3090	39.3										
	48	25100	2990	35.19										
	58	23800	2760	29.2										
iP 872	50	25700	2930	33.92										
	59	24100	2790	28.78										
	64	29600	2180	26.5										
	72	29600	2000	23.68										
	80	29600	1840	21.32 (1)										
	88	29600	1700	19.31										
	99	29600	1530	17.12										
	110	29600	1390	15.48										
2 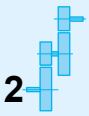	130	29200	1180	13.12 (1)										
	148	28400	1010	11.46										
	177	27700	910	9.58										
	205	15000	1780	8.29										
	231	15000	1650	7.35										
	256	15000	1550	6.65										
	302	15000	1390	5.63										
	346	15000	1260	4.92										
	413	13800	1170	4.12										

(1) Finite transmission ratio *i*

Gear reducer T_{N2max} = 43100 lb in n_1 = 1700 rpm					Motor size									
iP 97...	n_2 rpm	T_{N2} lb in	F_{r2} lb	i	63A 63B 71A 71B	80A 90S	90L 90LB	112MA 112M	112MB	132M 132MB	132MC	160M 160L	180M 180L	200L
iP 973	6.1	43100	6720	276.77										
	6.7	43100	6720	253.41										
	7.6	43100	6720	223.88										
	9	43100	6720	189.92										
	9.7	43100	6720	174.87										
	11	43100	6720	156.3										
	12	43100	6720	140.71										
	13	42900	6720	127.42										
	15	42800	6720	112.99										
	17	42600	6720	102.16										
	17	42600	6720	97.58										
3	19	42500	6720	89.85										
	20	42400	6720	86.59										
	21	42300	6540	80.31										
	22	42200	6350	75.63										
	24	42200	6200	72.29										
	26	42000	5890	65.47										
	29	41900	5520	58.06										
	32	41700	5230	52.49										
	38	41500	4770	44.49										
	44	41400	4410	38.86										
	52	41100	3960	32.5										
iP 972	39	30500	5660	43.28										
	46	30500	5230	36.64										
	50	41200	4060	33.91										
	56	41000	3800	30.39										
	62	40900	3550	27.44 (1)										
	68	40800	3340	24.92										
	77	40600	3070	22.11										
	85	40500	2870	20.07										
	99	40300	2560	17.25 (1)										
2	113	40100	2300	15.06										
	133	39900	1990	12.77										
	152	38700	1910	11.16										
	188	23500	2680	9.06										
	207	23500	2530	8.22										
	240	23500	2300	7.07										
	276	22100	2200	6.17										
	325	21400	2070	5.23										
	372	19900	1980	4.57										

(1) Finite transmission ratio *i*

P_1 = 0.16 hp

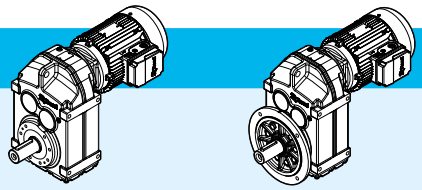

n_2 rpm	T_2 lb in	i	F_{r2} lb	SF			lb foot HB	lb foot HBZ	lb flange HB	lb flange HBZ	p.
4.9	2060	228.99	2920	4	**iP 673 – HB2 63 B 6 B16B**	3	81	85	96	100	266
5.7	1760	195.39	2920	4.7							
6.6	1540	170.85	2920	5.3							
6.9	1460	162.31	2920	5.6							
7.9	1280	142.4	2920	6.2							
5.6	1800	199.7	2580	3.3	**iP 573 – HB2 63 B 6 B16B**	3	69	73	84	88	264
6.1	1650	183.6	2580	3.6							
7.1	1410	157.09	2580	4.2							
8.2	1230	136.16	2580	4.8							
8.8	1150	127.27	2580	5.1							
8.5	1190	199.7	2580	4.9	**iP 573 – HB2 63 A 4 B16B**	3	68	72	83	87	264
9.2	1100	183.6	2580	5.3							
11	935	157.09	2580	6.1							
12	810	136.16	2580	7							
5.9	1720	190.76	1750	2.3	**iP 473 – HB2 63 B 6 B12B**	3	55	59	62	66	262
6.4	1580	175.38	1770	2.5							
7.5	1350	150.06	1790	2.9							
8.6	1170	130.07	1810	3.4							
9.2	1090	121.57	1820	3.6							
11	945	105.09	1830	4.2							
13	805	89.29	1840	5							
14	720	79.72	1840	5.5							
8.9	1140	190.76	1820	3.5	**iP 473 – HB2 63 A 4 B12B**	3	53	57	61	65	262
9.6	1050	175.38	1820	3.8							
11	895	150.06	1830	4.4							
13	775	130.07	1840	5.1							
8.7	1160	128.51	1130	1.7	**iP 373 – HB2 63 B 6 B12B**	3	45	49	50	54	260
9.5	1060	117.88	1150	1.85							
11	905	100.36	1180	2.2							
13	780	86.53	1190	2.5							
14	725	80.65	1200	2.7							
13	765	128.51	1200	2.6	**iP 373 – HB2 63 A 4 B12B**	3	44	48	49	53	260
14	705	117.88	1200	2.8							
17	600	100.36	1220	3.3							
20	515	86.53	1220	3.8							
21	480	80.65	1230	4.1							
10	990	109.9	1010	1.3	**iP 273 – HB2 63 B 6 B12B**	3	33	37	36	40	258
12	855	94.76	1010	1.5							
13	795	88.32	1010	1.6							
15	695	77.21	1010	1.85							

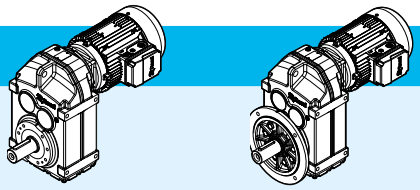

P_1 = 0.16 hp

n_2 rpm	T_2 lb in	i	F_{r2} lb	SF									lb foot HB	lb foot HBZ	lb flange HB	lb flange HBZ	p.
12	840	140.74	1010	1.55	**iP 273**	**–**	**HB2**	**63**	**A**	**4**	**B12B**	**3**	31	35	35	39	258
13	770	129.09	1010	1.65													
15	655	109.9	1010	1.95													
18	565	94.76	1010	2.3													
19	525	88.32	1010	2.4													
22	460	77.21	1010	2.8													
23	430	72.37	1010	3													
26	380	63.86	1010	3.4													
30	340	56.62	1010	3.8													
34	300	50.19	1010	4.3													
36	280	46.78	1000	4.6													
41	245	40.89	960	5.3													
44	230	38.33	940	5.6													
50	200	33.83	910	6.4													
57	176	29.56	870	7.3	**iP 272**	**–**	**HB2**	**63**	**A**	**4**	**B12B**	**2**	31	35	34	38	258
62	162	27.18	850	7.9													
73	139	23.25	810	9.2													
84	120	20.15	775	11													
90	112	18.84	755	11													
104	97	16.28	725	13													
122	83	13.84	685	16													
137	74	12.35	665	17													
160	63	10.55	630	20													
171	59	9.88	620	21													
180	56	9.4	605	21													
208	49	8.13	580	22													
245	41	6.91	550	24													
274	37	6.17	530	26													
321	31	5.27	505	28													
343	29	4.93	495	29													
407	25	4.16	465	32													

P_1 = 0.25 hp

4	3960	281.71	4440	3.8	**iP 773**	**–**	**HB2**	**71**	**A**	**6**	**B20B**	**3**	140	145	165	170	268
4.3	3700	262.93	4450	4.1													
5	3180	225.79	4470	4.7													
7.3	2150	228.99	2920	3.7	**iP 673**	**–**	**HB2**	**63**	**B**	**4**	**B16B**	**3**	81	85	96	100	266
8.6	1830	195.39	2920	4.2													
9.8	1600	170.85	2920	4.8													
4.9	3220	228.99	2890	2.5	**iP 673**	**–**	**HB2**	**71**	**A**	**6**	**B16B**	**3**	84	90	99	105	266
5.7	2750	195.39	2920	3													
6.6	2400	170.85	2920	3.4													
8.4	1870	199.7	2580	3.1	**iP 573**	**–**	**HB2**	**63**	**B**	**4**	**B16B**	**3**	69	73	84	88	264
9.2	1720	183.6	2580	3.3													

P_1 = 0.25 hp

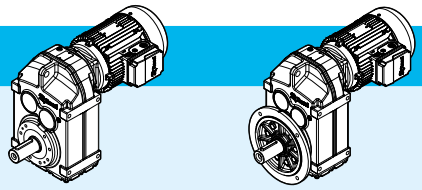

n_2 rpm	T_2 lb in	i	F_{r2} lb	SF			lb foot HB	lb foot HBZ	lb flange HB	lb flange HBZ	p.
11	1470	157.09	2580	3.9	iP 573 – HB2 63 B 4 B16B	3	69	73	84	88	264
12	1280	136.16	2580	4.5							
13	1190	127.27	2580	4.8							
5.6	2810	199.7	2460	2.1	iP 573 – HB2 71 A 6 B16B	3	72	78	87	93	264
6.1	2580	183.6	2500	2.3							
7.1	2210	157.09	2550	2.7							
8.2	1920	136.16	2580	3.1							
8.8	1790	127.27	2580	3.3							
10	1550	110.01	2580	3.7							
8.8	1790	190.76	1750	2.2	iP 473 – HB2 63 B 4 B12B	3	55	59	62	66	262
9.6	1640	175.38	1760	2.4							
11	1410	150.06	1790	2.8							
13	1220	130.07	1810	3.3							
14	1140	121.57	1820	3.5							
5.9	2680	190.76	1550	1.5	iP 473 – HB2 71 A 6 B12B	3	58	64	65	71	262
6.4	2470	175.38	1600	1.6							
7.5	2110	150.06	1680	1.9							
8.6	1830	130.07	1720	2.2							
9.2	1710	121.57	1740	2.3							
13	1210	128.51	1130	1.65	iP 373 – HB2 63 B 4 B12B	3	45	49	50	54	260
14	1110	117.88	1150	1.8							
17	940	100.36	1170	2.1							
19	810	86.53	1190	2.4							
21	755	80.65	1200	2.6							
24	660	70.5	1210	3							
25	620	66.09	1210	3.2							
29	545	58.32	1220	3.6							
9.5	1660	117.88	980	1.2	iP 373 – HB2 71 A 6 B12B	3	49	55	53	59	260
11	1410	100.36	1060	1.4							
13	1220	86.53	1110	1.65							
14	1130	80.65	1130	1.75							
16	990	70.5	1160	2							
15	1030	109.9	1010	1.25	iP 273 – HB2 63 B 4 B12B	3	33	37	36	40	258
18	890	94.76	1010	1.45							
19	830	88.32	1010	1.55							
22	725	77.21	1010	1.75							
23	680	72.37	1010	1.9							
26	600	63.86	1010	2.1							
30	530	56.62	1010	2.4							
33	470	50.19	980	2.7							
36	440	46.78	960	2.9							
41	385	40.89	920	3.3							
44	360	38.33	910	3.6							
50	315	33.83	880	4							

P_1 = 0.25 hp

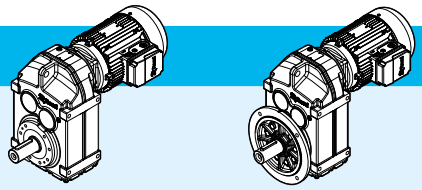

n_2 rpm	T_2 lb in	i	F_{r2} lb	SF																			
57	275	29.56	840	4.6	**iP 272**	**–**	**HB2**	**63**	**B**	**4**	**B12B**	2	32	36	36	40	258
62	255	27.18	820	5													
72	220	23.25	785	5.9													
83	189	20.15	755	6.8													
89	177	18.84	740	7.3													
103	153	16.28	710	8.4													
121	130	13.84	675	9.9													
136	116	12.35	650	11													
159	99	10.55	620	13													
170	93	9.88	610	13													
179	88	9.4	595	13													
207	76	8.13	570	14													
243	65	6.91	540	16													
272	58	6.17	525	17													
319	49	5.27	495	18													
341	46	4.93	485	19													
404	39	4.16	460	20													

P_1 = 0.33 hp

4	5230	281.71	4380	2.9	**iP 773**	**–**	**HB2**	**71**	**B**	**6**	**B20B**	3	140	150	165	170	268
4.3	4880	262.93	4400	3.1													
5	4190	225.79	4430	3.6													
5.6	3680	198.31	4450	4.1													
5.9	3500	188.4	4460	4.3													
4.9	4250	228.99	2800	1.95	**iP 673**	**–**	**HB2**	**71**	**B**	**6**	**B16B**	3	86	92	100	105	266
5.7	3630	195.39	2860	2.3													
6.6	3170	170.85	2910	2.6													
6.9	3010	162.31	2920	2.7													
7.9	2640	142.4	2920	3													
7.5	2770	228.99	2920	2.9	**iP 673**	**–**	**HB2**	**71**	**A**	**4**	**B16B**	3	84	90	98	105	266
8.8	2360	195.39	2920	3.3													
10	2070	170.85	2920	3.7													
11	1960	162.31	2920	3.9													
12	1720	142.4	2920	4.4													
5.6	3710	199.7	2340	1.6	**iP 573**	**–**	**HB2**	**71**	**B**	**6**	**B16B**	3	74	80	89	95	264
6.1	3410	183.6	2380	1.75													
7.1	2920	157.09	2460	2													
8.2	2530	136.16	2510	2.3													
8.8	2360	127.27	2540	2.5													
10	2040	110.01	2580	2.8													
8.6	2410	199.7	2530	2.4	**iP 573**	**–**	**HB2**	**71**	**A**	**4**	**B16B**	3	72	78	86	92	264
9.4	2220	183.6	2560	2.6													
11	1900	157.09	2580	3													
13	1650	136.16	2580	3.5													

P_1 = 0.33 hp

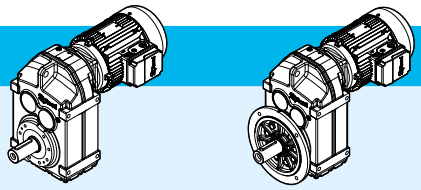

n_2 rpm	T_2 lb in	i	F_{r2} lb	SF			lb foot HB	lb foot HBZ	lb flange HB	lb flange HBZ	p.
14	1540	127.27	2580	3.7	**iP 573 – HB2 71 A 4 B16B**	3	72	78	86	92	264
16	1330	110.01	2580	4.2							
7.5	2790	150.06	1540	1.45	**iP 473 – HB2 71 B 6 B12B**	3	60	66	67	73	262
8.6	2420	130.07	1630	1.65							
9.2	2260	121.57	1660	1.75							
11	1950	105.09	1710	2							
9	2310	190.76	1650	1.75	**iP 473 – HB2 71 A 4 B12B**	3	57	63	65	71	262
9.8	2120	175.38	1690	1.9							
11	1810	150.06	1740	2.2							
13	1570	130.07	1770	2.5							
14	1470	121.57	1780	2.7							
16	1270	105.09	1800	3.1							
19	1080	89.29	1820	3.7							
13	1550	128.51	1030	1.3	**iP 373 – HB2 71 A 4 B12B**	3	48	54	52	58	260
15	1430	117.88	1070	1.4							
17	1210	100.36	1120	1.65							
20	1050	86.53	1150	1.9							
21	975	80.65	1160	2							
24	855	70.5	1180	2.3							
26	800	66.09	1190	2.5							
29	705	58.32	1200	2.8							
32	660	54.54	1210	3							
33	625	51.7	1210	3.2							
37	570	47.02	1220	3.5							
39	530	43.83	1220	3.7							
45	465	38.31	1230	4.3							
48	435	35.91	1210	4.6							
54	385	31.69	1170	5.2							
22	935	77.21	1010	1.35	**iP 273 – HB2 71 A 4 B12B**	3	35	41	39	45	258
24	875	72.37	1010	1.45							
27	770	63.86	990	1.65							
30	685	56.62	970	1.85							
34	605	50.19	940	2.1							
37	565	46.78	930	2.3							
42	495	40.89	900	2.6							
45	465	38.33	880	2.8							
51	410	33.83	850	3.1							
58	355	29.56	820	3.6	**iP 272 – HB2 71 A 4 B12B**	2	34	40	38	44	258
63	330	27.18	810	3.9							
74	280	23.25	770	4.6							
85	245	20.15	740	5.3							
91	230	18.84	725	5.6							
106	197	16.28	695	6.5							
124	167	13.84	665	7.7							
139	149	12.35	645	8.6							

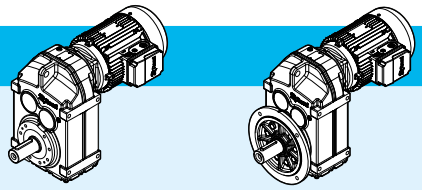

P_1 = 0.33 hp

n_2 rpm	T_2 lb in	i	F_{r2} lb	SF			lb foot HB	lb foot HBZ	lb flange HB	lb flange HBZ	p.
163	128	10.55	615	9.9	**iP 272 – HB2 71 A 4 B12B**	2	34	40	38	44	258
174	119	9.88	600	10							
183	114	9.4	590	10							
212	98	8.13	565	11							
249	84	6.91	535	12							
279	75	6.17	520	13							
327	64	5.27	495	14							
349	60	4.93	485	14							
414	50	4.16	460	16							

P_1 = 0.5 hp

4.2	7550	270.68	6570	3.9	**iP 873 – HB2 80 A 6 B25C**	3	240	245	275	285	270
4.4	7120	255.37	6590	4.2							
4.9	6380	228.93	6630	4.6							
5	6300	225.79	4310	2.4	**iP 773 – HB2 80 A 6 B20C**	3	145	155	170	175	268
5.7	5530	198.31	4360	2.7							
6	5250	188.4	4380	2.9							
6.8	4640	166.47	4410	3.2							
7.9	3970	142.27	4440	3.8							
6.1	5160	281.71	4390	2.9	**iP 773 – HB2 71 B 4 B20B**	3	140	145	165	170	268
6.5	4820	262.93	4400	3.1							
7.6	4140	225.79	4440	3.6							
8.7	3630	198.31	4460	4.1							
5.8	5450	195.39	2630	1.5	**iP 673 – HB2 80 A 6 B16C**	3	89	98	105	110	266
6.6	4760	170.85	2730	1.7							
7	4530	162.31	2760	1.8							
7.9	3970	142.4	2830	2							
9.4	3370	120.79	2890	2.3							
7.5	4200	228.99	2810	1.9	**iP 673 – HB2 71 B 4 B16B**	3	86	92	100	105	266
8.8	3580	195.39	2870	2.2							
10	3130	170.85	2910	2.5							
11	2970	162.31	2920	2.6							
12	2610	142.4	2920	2.9							
14	2210	120.79	2920	3.4							
7.2	4380	157.09	2220	1.35	**iP 573 – HB2 80 A 6 B16C**	3	77	86	91	100	264
8.3	3800	136.16	2320	1.55							
8.9	3550	127.27	2360	1.65							
10	3070	110.01	2430	1.85							
8.6	3660	199.7	2350	1.6	**iP 573 – HB2 71 B 4 B16B**	3	74	80	88	94	264
9.4	3360	183.6	2400	1.7							
11	2880	157.09	2470	2							
13	2490	136.16	2520	2.3							
14	2330	127.27	2540	2.4							
16	2020	110.01	2580	2.8							

P_1 = 0.5 hp

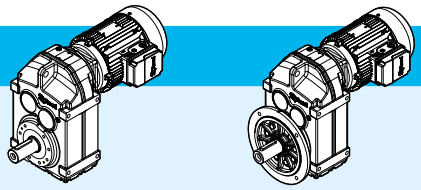

n_2 rpm	T_2 lb in	i	F_{r2} lb	SF			lb foot HB	lb foot HBZ	lb flange HB	lb flange HBZ	p.
18	1710	93.47	2580	3.3	iP 573 – HB2 71 B 4 B16B	3	74	80	88	94	264
21	1530	83.46	2580	3.7							
11	2750	150.06	1560	1.45	iP 473 – HB2 71 B 4 B12B	3	59	65	67	73	262
13	2380	130.07	1640	1.65							
16	1930	105.09	1720	2.1							
19	1640	89.29	1760	2.4							
22	1460	79.72	1780	2.7							
25	1250	68.09	1800	3.2							
26	1200	65.36	1810	3.3							
20	1590	86.53	1020	1.25	iP 373 – HB2 71 B 4 B12B	3	50	56	54	60	260
21	1480	80.65	1050	1.35							
24	1290	70.5	1100	1.55							
26	1210	66.09	1120	1.65							
29	1070	58.32	1150	1.85							
32	1000	54.54	1160	2							
33	945	51.7	1170	2.1							
37	860	47.02	1180	2.3							
39	805	43.83	1190	2.5							
45	700	38.31	1180	2.8							
48	660	35.91	1170	3							
54	580	31.69	1130	3.4							
61	515	28.09	1090	3.9							
72	440	23.88	1050	4.5							
30	1040	56.62	890	1.25	iP 273 – HB2 71 B 4 B12B	3	37	43	41	47	258
34	920	50.19	870	1.4							
37	855	46.78	860	1.5							
42	750	40.89	840	1.7							
45	700	38.33	830	1.85							
51	620	33.83	810	2.1							
58	540	29.56	780	2.4	iP 272 – HB2 71 B 4 B12B	2	36	42	40	46	258
63	500	27.18	765	2.6							
74	425	23.25	740	3							
85	370	20.15	715	3.5							
91	345	18.84	700	3.7							
106	300	16.28	675	4.3							
124	255	13.84	645	5.1							
139	225	12.35	625	5.7							
163	193	10.55	600	6.6							
174	181	9.88	585	6.9							
183	172	9.4	575	6.7							
212	149	8.13	550	7.3							
249	127	6.91	525	8							
279	113	6.17	510	8.5							
327	97	5.27	485	9.2							
349	90	4.93	475	9.5							
414	76	4.16	450	10							

P_1 = 0.75 hp

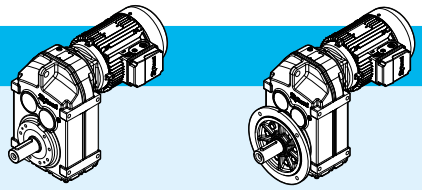

n_2 rpm	T_2 lb in	i	F_{r2} lb	SF			lb foot HB	lb foot HBZ	lb flange HB	lb flange HBZ	p.
4.2	11200	270.68	6370	2.6	iP 873 – HB2 80 B 6 B25C	3	245	255	280	290	270
4.5	10600	255.37	6400	2.8							
5	9490	228.93	6470	3.1							
5.8	8180	197.2	6540	3.6							
6.3	7460	179.97	6580	4							
5	9360	225.79	4040	1.6	iP 773 – HB2 80 B 6 B20C	3	150	160	175	185	268
5.7	8220	198.31	4160	1.85							
6.1	7810	188.4	4200	1.95							
6.8	6900	166.47	4270	2.2							
8	5900	142.27	4340	2.6							
8.7	5410	130.42	4370	2.8							
7.7	6130	225.79	4320	2.5	iP 773 – HB2 80 A 4 B20C	3	145	155	170	180	268
8.8	5390	198.31	4370	2.8							
9.2	5120	188.4	4380	2.9							
10	4520	166.47	4410	3.3							
12	3860	142.27	4440	3.9							
13	3540	130.42	4460	4.2							
15	3110	114.45	4470	4.8							
16	2950	108.46(1)	4480	5.1							
18	2580	94.93	4490	5.8							
8.9	5310	195.39	2650	1.45	iP 673 – HB2 80 A 4 B16C	3	91	100	105	115	266
10	4640	170.85	2750	1.65							
11	4410	162.31	2770	1.75							
12	3870	142.4	2840	1.95							
14	3280	120.79	2890	2.3							
16	2960	109.04	2920	2.6							
18	2610	95.94	2920	2.9							
19	2460	90.59	2920	3.1							
22	2170	79.76	2920	3.5							
11	4270	157.09	2230	1.35	iP 573 – HB2 80 A 4 B16C	3	79	88	94	100	264
13	3700	136.16	2330	1.55							
14	3460	127.27	2370	1.65							
16	2990	110.01	2440	1.9							
19	2540	93.47	2510	2.2							
21	2270	83.46	2550	2.5							
24	1980	72.98	2580	2.8							
26	1850	68.22	2580	3							
30	1600	58.97	2580	3.5							
17	2850	105.09	1520	1.4	iP 473 – HB2 80 A 4 B12C	3	65	73	72	81	262
19	2430	89.29	1620	1.65							
22	2170	79.72	1670	1.85							
26	1850	68.09	1730	2.2							
27	1780	65.36	1740	2.2							
31	1530	56.49	1770	2.6							
36	1300	48(1)	1800	3.1							
41	1160	42.86	1810	3.4							

(1) Finite transmission ratio i

P_1 = 0.75 hp

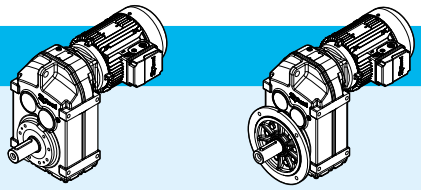

n_2 rpm	T_2 lb in	i	F_{r2} lb	SF			lb foot HB	lb foot HBZ	lb flange HB	lb flange HBZ	p.
30	1580	58.32	1010	1.25	**iP 373 – HB2 80 A 4 B12C**	3	55	64	60	68	260
32	1480	54.54	1040	1.35							
34	1400	51.7	1070	1.4							
37	1280	47.02	1100	1.55							
40	1190	43.83	1120	1.65							
45	1040	38.31	1110	1.9							
48	975	35.91	1100	2							
55	860	31.69	1070	2.3							
62	765	28.09	1040	2.6							
73	650	23.88	1000	3.1							
74	640	23.63	1000	3.1	**iP 372 – HB2 80 A 4 B12C**	2	54	63	59	68	260
85	560	20.57	970	3.5							
90	525	19.27	950	3.8							
102	465	17.03	920	4.3							
121	390	14.33	880	5.1							
75	630	23.25	690	2	**iP 272 – HB2 80 A 4 B12C**	2	42	51	45	54	258
86	550	20.15	670	2.3							
92	510	18.84	660	2.5							
107	440	16.28	640	2.9							
126	375	13.84	615	3.4							
141	335	12.35	600	3.8							
165	285	10.55	575	4.4							
176	270	9.88	565	4.6							
185	255	9.4	555	4.5							
214	220	8.13	535	4.9							
252	188	6.91	510	5.4							
282	168	6.17	495	5.8							
330	143	5.27	475	6.2							
353	134	4.93	465	6.4							
419	113	4.16	445	6.9							

P_1 = 1 hp

4.2	15000	276.77	8080	2.9	**iP 973 – HB3 100 LA 6 B30D**	3	420	435	495	510	272
4.6	13800	253.41	8130	3.1							
5.2	12200	223.88	8200	3.5							
4.3	14700	270.68	6160	2	**iP 873 – HB3 100 LA 6 B25D**	3	285	295	320	335	270
4.5	13900	255.37	6220	2.1							
5.1	12400	228.93	6310	2.4							
5.9	10700	197.2	6410	2.8							
6.4	9780	179.97	6460	3							
7.3	8670	159.61	6520	3.4							
6.4	9800	270.68	6460	3	**iP 873 – HB3 90 S 4 B25C**	3	255	265	290	300	270
6.8	9250	255.37	6490	3.2							
7.6	8290	228.93	6540	3.6							

P_1 = 1 hp

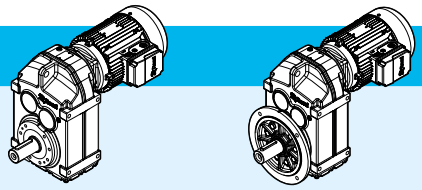

n_2 rpm	T_2 lb in	i	F_{r2} lb	SF			lb foot HB	lb foot HBZ	lb flange HB	lb flange HBZ	p.
5.8	10800	198.31	3910	1.4	**iP 773 – HB3 100 LA 6 B20D**	3	190	205	215	225	268
6.2	10200	188.4	3970	1.45							
7	9040	166.47	4100	1.65							
8.2	7730	142.27	4220	1.95							
8.9	7090	130.42	4270	2.1							
10	6220	114.45	4330	2.4							
11	5890	108.46(1)	4350	2.6							
12	5160	94.93	4390	2.9							
14	4650	85.52	4420	3.2							
7.7	8180	225.79	4180	1.85	**iP 773 – HB3 90 S 4 B20C**	3	160	170	185	195	268
8.8	7180	198.31	4260	2.1							
9.2	6820	188.4	4290	2.2							
10	6030	166.47	4340	2.5							
12	5150	142.27	4390	2.9							
13	4720	130.42	4410	3.2							
15	4150	114.45	4440	3.6							
16	3930	108.46(1)	4450	3.8							
9.6	6560	120.79	2470	1.2	**iP 673 – HB3 100 LA 6 B16D**	3	135	145	150	160	266
11	5920	109.04	2580	1.3							
12	5210	95.94	2690	1.45							
13	4920	90.59	2730	1.55							
15	4330	79.76	2800	1.75							
17	3680	67.65	2870	2.1							
19	3320	61.07	2900	2.3							
22	2920	53.73	2920	2.6							
23	2760	50.74	2920	2.7							
8.9	7080	195.39	2370	1.1	**iP 673 – HB3 90 S 4 B16C**	3	105	115	120	130	266
10	6190	170.85	2540	1.25							
11	5880	162.31	2590	1.3							
12	5160	142.4	2700	1.5							
14	4380	120.79	2800	1.75							
16	3950	109.04	2840	1.9							
18	3470	95.94	2890	2.2							
19	3280	90.59	2900	2.3							
22	2890	79.76	2920	2.6							
26	2450	67.65	2920	3							
28	2210	61.07	2920	3.4							
12	5080	93.47	2120	1.1	**iP 573 – HB3 100 LA 6 B16D**	3	120	135	135	150	264
14	4530	83.46	2210	1.25							
16	3970	72.98	2310	1.45							
17	3710	68.22	2350	1.5							
20	3200	58.97	2430	1.75							
23	2720	50.1	2500	2.1							
26	2430	44.73	2530	2.3							
30	2080	38.21	2570	2.7							
32	1940	35.79	2530	2.8							

(1) Finite transmission ratio i

P_1 = 1 hp

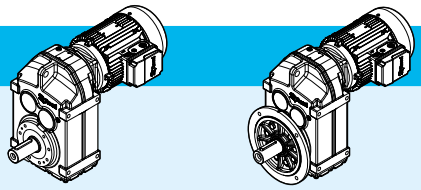

n_2 rpm	T_2 lb in	i	F_{r2} lb	SF			lb foot HB	lb foot HBZ	lb flange HB	lb flange HBZ	p.
13	4930	136.16	2140	1.15	iP 573 – HB3 90 S 4 B16C	3	94	100	110	115	264
14	4610	127.27	2200	1.25							
16	3980	110.01	2310	1.4							
19	3390	93.47	2400	1.65							
21	3020	83.46	2450	1.85							
24	2640	72.98	2510	2.1							
26	2470	68.22	2530	2.3							
30	2140	58.97	2570	2.6							
35	1810	50.1	2480	3							
39	1620	44.73	2410	3.4							
21	3070	56.49	1490	1.3	iP 473 – HB3 100 LA 6 B12D	3	105	120	115	125	262
24	2610	48(1)	1600	1.55							
27	2330	42.86	1660	1.7							
32	1990	36.61	1720	2							
34	1860	34.29	1730	2.1							
40	1570	28.88	1760	2.5							
19	3230	89.29	1440	1.25	iP 473 – HB3 90 S 4 B12C	3	79	87	86	95	262
22	2890	79.72	1540	1.4							
26	2470	68.09	1630	1.6							
27	2370	65.36	1650	1.7							
31	2050	56.49	1710	1.95							
36	1740	48(1)	1750	2.3							
41	1550	42.86	1760	2.6							
48	1330	36.61	1690	3							
51	1240	34.29	1670	3.2							
60	1050	28.88	1600	3.8							
37	1720	31.69	980	1.15	iP 373 – HB3 100 LA 6 B12D	3	96	110	100	115	260
41	1530	28.09	1050	1.3							
49	1300	23.88	1020	1.55							
37	1700	47.02	990	1.15	iP 373 – HB3 90 S 4 B12C	3	69	78	74	82	260
40	1590	43.83	1030	1.25							
45	1390	38.31	1030	1.45							
48	1300	35.91	1020	1.5							
55	1150	31.69	1000	1.75							
62	1020	28.09	980	1.95							
73	865	23.88	950	2.3							
74	855	23.63	950	2.3	iP 372 – HB3 90 S 4 B12C	2	68	77	73	82	260
85	745	20.57	920	2.7							
90	700	19.27	900	2.8							
102	615	17.03	880	3.2							
121	520	14.33	840	3.8							
135	465	12.87	820	4.2							
75	840	23.25	640	1.5	iP 272 – HB3 90 S 4 B12C	2	56	65	59	68	258
86	730	20.15	625	1.75							
92	680	18.84	620	1.9							

(1) Finite transmission ratio i

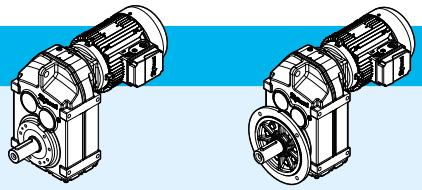

P_1 = 1 hp

n_2 rpm	T_2 lb in	i	F_{r2} lb	SF			lb foot HB	lb foot HBZ	lb flange HB	lb flange HBZ	p.
107	590	16.28	605	2.2	**iP 272 – HB3 90 S 4 B12C**	2	56	65	59	68	258
126	500	13.84	585	2.6							
141	445	12.35	570	2.9							
165	380	10.55	550	3.3							
176	360	9.88	540	3.5							
185	340	9.4	525	3.4							
214	295	8.13	510	3.7							
252	250	6.91	490	4							
282	225	6.17	475	4.3							
330	191	5.27	455	4.6							
353	179	4.93	450	4.8							
419	151	4.16	430	5.2							

P_1 = 1.5 hp

4.2	22600	276.77	7730	1.9	**iP 973 – HB3 112 M 6 B30D**	3	440	455	510	530	272
4.6	20700	253.41	7830	2.1							
5.2	18200	223.88	7940	2.4							
6.1	15500	189.92	8070	2.8							
6.6	14300	174.87	8120	3							
6.3	15000	276.77	8080	2.9	**iP 973 – HB3 90 L 4 B30D**	3	405	415	475	485	272
6.9	13800	253.41	8140	3.1							
7.8	12200	223.88	8200	3.5							
5.9	16100	197.2	6080	1.85	**iP 873 – HB3 112 M 6 B25D**	3	305	315	340	350	270
6.4	14700	179.97	6180	2							
7.3	13000	159.61	6280	2.3							
6.4	14700	270.68	6170	2	**iP 873 – HB3 90 L 4 B25D**	3	260	270	295	305	270
6.8	13900	255.37	6220	2.1							
7.6	12400	228.93	6310	2.4							
8.8	10700	197.2	6420	2.8							
9.7	9780	179.97	6470	3							
11	8670	159.61	6530	3.4							
13	7290	134.16	6600	4.1							
14	6700	123.29	6620	4.4							
8.8	10800	198.31	3920	1.4	**iP 773 – HB3 90 L 4 B20D**	3	165	175	190	200	268
9.2	10200	188.4	3980	1.45							
10	9040	166.47	4110	1.65							
12	7730	142.27	4220	1.95							
13	7090	130.42	4270	2.1							
15	6220	114.45	4330	2.4							
16	5890	108.46(1)	4350	2.6							
18	5160	94.93	4390	2.9							
20	4650	85.52	4420	3.2							
23	4080	75.02	4440	3.7							
14	6560	120.79	2480	1.15	**iP 673 – HB3 90 L 4 B16D**	3	110	120	125	135	266
16	5920	109.04	2590	1.3							

(1) Finite transmission ratio i

P_1 = 1.5 hp

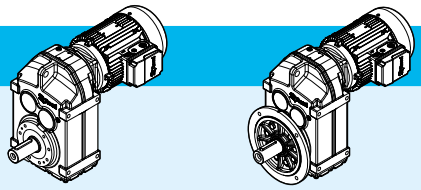

n_2 rpm	T_2 lb in	i	F_{r2} lb	SF			lb foot HB	lb foot HBZ	lb flange HB	lb flange HBZ	p.
18	5210	95.94	2700	1.45	iP 673 – HB3 90 L 4 B16D	3	110	120	125	135	266
19	4920	90.59	2740	1.55							
22	4330	79.76	2800	1.75							
26	3680	67.65	2870	2							
28	3320	61.07	2900	2.2							
32	2920	53.73	2920	2.5							
34	2760	50.74	2920	2.7							
40	2350	43.2	2920	3.1							
44	2130	39.26	2920	3.4							
51	1850	34.01	2920	3.8							
19	5080	93.47	2120	1.1	iP 573 – HB3 90 L 4 B16D	3	100	110	115	125	264
21	4530	83.46	2220	1.25							
24	3970	72.98	2320	1.4							
26	3710	68.22	2360	1.5							
30	3200	58.97	2430	1.75							
35	2720	50.1	2340	2							
39	2430	44.73	2290	2.3							
46	2080	38.21	2200	2.6							
49	1940	35.79	2170	2.7							
58	1640	30.15	2080	3.2							
27	3550	65.36	1340	1.1	iP 473 – HB3 90 L 4 B12D	3	85	94	93	100	262
31	3070	56.49	1490	1.3							
36	2610	48(1)	1600	1.55							
41	2330	42.86	1620	1.7							
48	1990	36.61	1580	2							
51	1860	34.29	1560	2.1							
60	1570	28.88	1500	2.5							
56	1680	30.86	1530	2.4	iP 472 – HB3 90 L 4 B12D	2	83	92	91	99	262
59	1590	29.32	1510	2.5							
68	1400	25.72	1470	2.8							
80	1190	21.82	1410	3.4							
88	1070	19.7	1380	3.7							
55	1720	31.69	880	1.15	iP 373 – HB3 90 L 4 B12D	3	76	85	80	89	260
62	1530	28.09	870	1.3							
73	1300	23.88	860	1.55							
85	1120	20.57	840	1.75	iP 372 – HB3 90 L 4 B12D	2	75	84	80	88	260
90	1050	19.27	830	1.9							
102	925	17.03	810	2.1							
110	860	15.81	800	2.3							
121	780	14.33	790	2.5							
135	700	12.87	770	2.8							
157	600	11.08	745	3							
167	565	10.42	735	3.1							
194	485	8.97	710	3.4							
86	1100	20.15	545	1.15	iP 272 – HB3 90 L 4 B12D	2	63	71	66	75	258
92	1020	18.84	540	1.25							

(1) Finite transmission ratio i

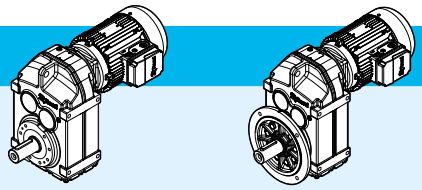

P_1 = 1.5 hp

n_2 rpm	T_2 lb in	i	F_{r2} lb	SF			lb foot HB	lb foot HBZ	lb flange HB	lb flange HBZ	p.
107	885	16.28	535	1.45	**iP 272 – HB3 90 L 4 B12D**	2	63	71	66	75	258
126	750	13.84	525	1.7							
141	670	12.35	520	1.9							
165	575	10.55	505	2.2							
176	535	9.88	500	2.3							
185	510	9.4	485	2.3							
214	440	8.13	475	2.5							
252	375	6.91	460	2.7							
282	335	6.17	450	2.9							
330	285	5.27	435	3.1							
353	270	4.93	425	3.2							
419	225	4.16	410	3.5							

P_1 = 2 hp

4.2	30100	276.77	7300	1.45	**iP 973 – HB3 112 MB 6 B30E**	3	440	455	510	530	272
4.6	27500	253.41	7460	1.55							
5.2	24300	223.88	7640	1.75							
6.1	20600	189.92	7830	2.1							
6.6	19000	174.87	7910	2.3							
6.3	20100	276.77	7850	2.1	**iP 973 – HB3 90 LB 4 B30D**	3	405	420	475	490	272
6.9	18400	253.41	7930	2.3							
7.8	16200	223.88	8030	2.7							
9.2	13800	189.92	8140	3.1							
10	12700	174.87	8180	3.4							
6.4	19600	270.68	5810	1.5	**iP 873 – HB3 90 LB 4 B25D**	3	260	275	295	310	270
6.8	18500	255.37	5900	1.6							
7.6	16600	228.93	6040	1.8							
8.8	14300	197.2	6200	2.1							
9.7	13000	179.97	6280	2.3							
11	11600	159.61	6370	2.6							
13	9720	134.16	6470	3.1							
14	8930	123.29	6510	3.3							
16	7930	109.49	6560	3.7							
18	7090	97.89	6610	4.2							
10	12100	166.47	3750	1.25	**iP 773 – HB3 90 LB 4 B20D**	3	165	180	190	205	268
12	10300	142.27	3980	1.45							
13	9450	130.42	4070	1.6							
15	8290	114.45	4180	1.8							
16	7860	108.46(1)	4210	1.9							
18	6880	94.93	4290	2.2							
20	6200	85.52	4330	2.4							
23	5430	75.02	4380	2.8							
24	5250	72.5	4390	2.9							
26	4810	66.46	4410	3.1							
30	4220	58.32	4440	3.6							

(1) Finite transmission ratio i

P_1 = 2 hp

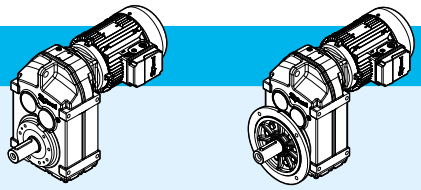

n_2 rpm	T_2 lb in	i	F_{r2} lb	SF			lb foot HB	lb foot HBZ	lb flange HB	lb flange HBZ	p.
31	4000	55.27	4450	3.8	iP 773 – HB3 90 LB 4 B20D	3	165	180	190	205	268
36	3500	48.37	4460	4.3							
40	3160	43.58	4480	4.7							
46	2770	38.23	4490	5.1							
48	2650	36.58	4490	4.2	iP 772 – HB3 90 LB 4 B20D	2	160	175	185	200	268
55	2280	31.51	4490	6							
18	6950	95.94	2410	1.1	iP 673 – HB3 90 LB 4 B16D	3	110	125	125	140	266
19	6560	90.59	2480	1.15							
22	5780	79.76	2620	1.3							
26	4900	67.65	2740	1.5							
28	4420	61.07	2800	1.7							
32	3890	53.73	2850	1.9							
34	3680	50.74	2870	2							
40	3130	43.2	2920	2.4							
44	2840	39.26	2920	2.6							
51	2460	34.01	2920	2.8							
48	2630	36.3	2920	2.8	iP 672 – HB3 90 LB 4 B16D	2	110	125	125	140	266
54	2320	32.08	2920	3.1							
63	1990	27.41	2920	3.7							
69	1820	25.13	2920	4							
24	5290	72.98	2090	1.05	iP 573 – HB3 90 LB 4 B16D	3	100	115	115	130	264
26	4940	68.22	2150	1.15							
30	4270	58.97	2270	1.3							
35	3630	50.1	2210	1.5							
39	3240	44.73	2160	1.7							
46	2770	38.21	2100	1.9							
49	2590	35.79	2070	2							
58	2180	30.15	1990	2.4							
58	2170	29.94	1990	2.4	iP 572 – HB3 90 LB 4 B16D	2	99	115	115	125	264
61	2060	28.45	1970	2.4							
70	1810	24.96	1910	3							
36	3480	48(1)	1370	1.15	iP 473 – HB3 90 LB 4 B12D	3	85	98	93	105	262
41	3100	42.86	1480	1.3							
48	2650	36.61	1460	1.5							
51	2480	34.29	1450	1.6							
60	2090	28.88	1410	1.9							
56	2240	30.86	1430	1.8	iP 472 – HB3 90 LB 4 B12D	2	83	96	91	105	262
59	2120	29.32	1420	1.9							
68	1860	25.72	1390	2.1							
80	1580	21.82	1340	2.5							
88	1430	19.7	1320	2.8							
100	1260	17.33	1280	3.2							
106	1190	16.36	1260	3.4							
125	1010	13.93	1220	3.9							
73	1730	23.88	770	1.15	iP 373 – HB3 90 LB 4 B12D	3	76	89	80	94	260

(1) Finite transmission ratio i

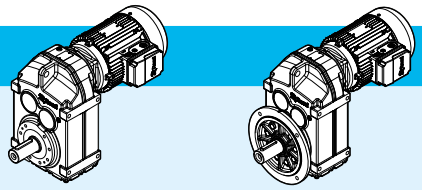

P_1 = 2 hp

n_2 rpm	T_2 lb in	i	F_{r2} lb	SF			lb foot HB	lb foot HBZ	lb flange HB	lb flange HBZ	p.
85	1490	20.57	765	1.35	**iP 372 – HB3 90 LB 4 B12D**	2	75	88	80	93	260
90	1400	19.27	760	1.4							
102	1230	17.03	750	1.6							
110	1150	15.81	745	1.75							
121	1040	14.33	735	1.9							
135	930	12.87	725	2.1							
157	805	11.08	705	2.3							
167	755	10.42	700	2.3							
194	650	8.97	680	2.6							
217	580	8.01	660	2.7							
234	540	7.44	640	2.4							
258	490	6.74	625	2.6							
288	440	6.05	610	2.7							
334	380	5.21	590	3							
355	355	4.9	580	3.1							
126	1000	13.84	470	1.3	**iP 272 – HB3 90 LB 4 B12D**	2	63	76	66	79	258
141	895	12.35	470	1.45							
165	765	10.55	465	1.65							
176	715	9.88	460	1.75							
185	680	9.4	440	1.7							
214	590	8.13	435	1.85							
252	500	6.91	425	2							
282	445	6.17	420	2.2							
330	380	5.27	410	2.3							
353	355	4.93	405	2.4							
419	300	4.16	390	2.6							

P_1 = 3 hp

5.2	36200	223.88	6880	1.2	**iP 973 – HB3 132 S 6 B30G**	3	470	495	540	570	272
6.2	30700	189.92	7250	1.4							
6.7	28300	174.87	7400	1.55							
7.5	25300	156.3	7570	1.7							
6.4	29700	276.77	7290	1.45	**iP 973 – HB3 112 MA 4 B30E**	3	435	445	500	520	272
6.9	27200	253.41	7450	1.6							
7.9	24100	223.88	7630	1.8							
9.3	20400	189.92	7820	2.1							
10	18800	174.87	7900	2.3							
11	16800	156.3	8000	2.6							
13	15100	140.71	8070	2.8							
14	13700	127.42	8130	3.1							
7.7	24600	228.93	5350	1.2	**iP 873 – HB3 112 MA 4 B25E**	3	295	310	330	345	270
8.9	21200	197.2	5660	1.4							
9.8	19300	179.97	5810	1.55							
11	17100	159.61	5980	1.75							
13	14400	134.16	6180	2.1							
14	13200	123.29	6250	2.2							
16	11800	109.49	6350	2.5							
18	10500	97.89	6270	2.8							

P_1 = 3 hp

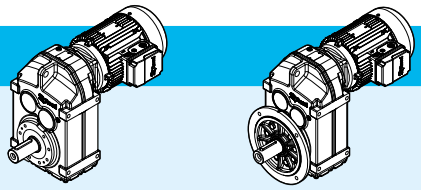

n_2 rpm	T_2 lb in	i	F_{r2} lb	SF			lb foot HB	lb foot HBZ	lb flange HB	lb flange HBZ	p.
20	9460	88.01	6120	3.1	iP 873 – HB3 112 MA 4 B25E	3	295	310	330	345	270
23	8210	76.39	5920	3.6							
26	7350	68.4	5760	4							
31	6100	56.75	5490	4.9							
35	5410	50.36	5320	5.2							
39	4860	45.28	5170	5.6							
15	12300	114.45	3690	1.2	iP 773 – HB3 112 MA 4 B20E	3	200	215	225	240	268
16	11700	108.46(1)	3790	1.3							
19	10200	94.93	3970	1.5							
21	9190	85.52	4080	1.65							
23	8060	75.02	4190	1.85							
24	7790	72.5	4210	1.95							
26	7140	66.46	4260	2.1							
30	6270	58.32	4320	2.4							
32	5940	55.27	4350	2.5							
36	5200	48.37	4390	2.9							
40	4680	43.58	4410	3.2							
48	3930	36.58	4450	2.8	iP 772 – HB3 112 MA 4 B20E	2	195	210	220	230	268
56	3380	31.51	4470	4.1							
61	3090	28.75	4480	4.6							
69	2740	25.5(1)	4490	5.5							
26	7270	67.65	2320	1.05	iP 673 – HB3 112 MA 4 B16E	3	145	160	160	175	266
29	6560	61.07	2460	1.15							
33	5770	53.73	2600	1.3							
35	5450	50.74	2650	1.35							
41	4640	43.2	2760	1.6							
45	4220	39.26	2810	1.75							
52	3650	34.01	2870	1.9							
55	3450	32.08	2890	2.1	iP 672 – HB3 112 MA 4 B16E	2	145	155	155	170	266
64	2950	27.41	2920	2.5							
70	2700	25.13	2920	2.7							
80	2370	22.05	2920	3.1							
84	2250	20.9(1)	2920	3.2							
96	1970	18.29	2920	3.7							
39	4810	44.73	1920	1.15	iP 573 – HB3 112 MA 4 B16E	3	135	145	150	160	264
46	4100	38.21	1890	1.3							
49	3840	35.79	1880	1.4							
58	3240	30.15	1830	1.6							
71	2680	24.96	1780	2	iP 572 – HB3 112 MA 4 B16E	2	130	145	145	160	264
83	2270	21.17	1720	2.4							
92	2050	19.11	1680	2.6							
105	1810	16.81	1640	2.9							
111	1710	15.88	1620	3.1							
68	2760	25.72	1230	1.45	iP 472 – HB3 112 MA 4 B12E	2	115	125	120	135	262
81	2340	21.82	1210	1.7							
89	2120	19.7	1190	1.9							
102	1860	17.33	1170	2.1							
108	1760	16.36	1160	2.3							
126	1500	13.93	1130	2.7							
139	1360	12.66	1110	2.9							

(1) Finite transmission ratio i

P_1 = 3 hp

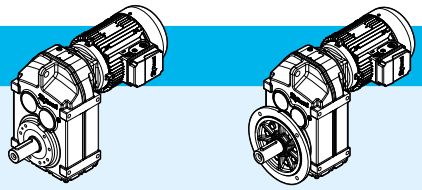

n_2 rpm	T_2 lb in	i	F_{r2} lb	SF			lb foot HB	lb foot HBZ	lb flange HB	lb flange HBZ	p.
160	1180	10.97	1080	3.4	**iP 472 – HB3 112 MA 4 B12E**	2	115	125	120	135	262
197	960	8.96	1010	3.4							
123	1540	14.33	630	1.3	**iP 372 – HB3 112 MA 4 B12E**	2	105	120	110	125	260
137	1380	12.87	625	1.4							
159	1190	11.08	625	1.55							
169	1120	10.42	620	1.6							
196	965	8.97	610	1.7							
220	860	8.01	600	1.8							
261	725	6.74	570	1.75							
291	650	6.05	560	1.85							
338	560	5.21	550	2							
359	525	4.9	540	2.1							
417	455	4.22	525	2.2							
467	405	3.77	515	2.4							
167	1130	10.55	380	1.1	**iP 272 – HB3 112 MA 4 B12E**	2	94	105	97	110	258
178	1060	9.88	380	1.15							
217	875	8.13	365	1.25							
255	740	6.91	365	1.35							
285	660	6.17	365	1.45							
334	565	5.27	360	1.55							
357	530	4.93	360	1.6							
424	445	4.16	355	1.75							

P_1 = 4 hp

7.8	32300	223.88	7150	1.35	**iP 973 – HB3 112 M 4 B30E**	3	440	450	510	520	272
9.2	27400	189.92	7450	1.6							
10	25200	174.87	7570	1.7							
11	22500	156.3	7720	1.9							
12	20300	140.71	7840	2.1							
14	18400	127.42	7930	2.3							
15	16300	112.99	8020	2.6							
17	14700	102.16	8090	2.9							
19	12900	89.85	8170	3.3							
13	19300	134.16	5820	1.55	**iP 873 – HB3 112 M 4 B25E**	3	300	315	335	350	270
14	17800	123.29	5950	1.65							
16	15800	109.49	6050	1.9							
18	14100	97.89	5930	2.1							
20	12700	88.01	5810	2.3							
23	11000	76.39	5650	2.7							
26	9850	68.4	5520	3							
31	8180	56.75	5290	3.6							
35	7260	50.36	5150	3.9							
20	12300	85.52	3700	1.2	**iP 773 – HB3 112 M 4 B20E**	3	210	225	235	245	268
23	10800	75.02	3910	1.4							
26	9570	66.46	4050	1.55							
30	8400	58.32	4160	1.8							
32	7960	55.27	4200	1.9							
36	6970	48.37	4280	2.2							

P_1 = 4 hp

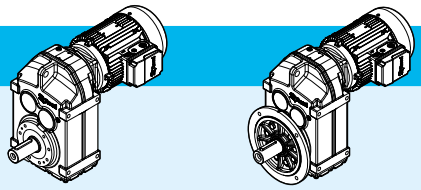

n_2 rpm	T_2 lb in	i	F_{r2} lb	SF			lb foot HB	lb foot HBZ	lb flange HB	lb flange HBZ	p.
40	6280	43.58	4330	2.4	**iP 773 – HB3 112 M 4 B20E**	3	210	225	235	245	268
46	5510	38.23	4370	2.6							
48	5270	36.58	4390	2.1	**iP 772 – HB3 112 M 4 B20E**	2	205	215	230	240	268
56	4540	31.51	4420	3							
61	4140	28.75	4440	3.4							
69	3670	25.5(1)	4460	4.1							
82	3090	21.43	4480	4.9							
41	6220	43.2	2530	1.2	**iP 673 – HB3 112 M 4 B16E**	3	150	165	165	180	266
45	5660	39.26	2630	1.3							
51	4900	34.01	2730	1.45							
55	4620	32.08	2770	1.6	**iP 672 – HB3 112 M 4 B16E**	2	150	160	165	175	266
64	3950	27.41	2840	1.85							
70	3620	25.13	2870	2							
79	3180	22.05	2910	2.3							
84	3010	20.9(1)	2920	2.4							
96	2640	18.29	2920	2.8							
106	2370	16.48	2920	3.1							
121	2080	14.46	2920	3.5							
70	3600	24.96	1640	1.5	**iP 572 – HB3 112 M 4 B16E**	2	140	150	150	165	264
83	3050	21.17	1610	1.75							
92	2750	19.11	1580	1.95							
104	2420	16.81	1550	2.2							
110	2290	15.88	1530	2.3							
129	1950	13.52	1480	2.7							
142	1770	12.29	1460	3							
164	1530	10.64	1410	3.5							
89	2840	19.7	1070	1.4	**iP 472 – HB3 112 M 4 B12E**	2	120	135	130	140	262
101	2500	17.33	1070	1.6							
107	2360	16.36	1060	1.7							
126	2010	13.93	1040	2							
138	1820	12.66	1030	2.2							
160	1580	10.97	1010	2.5							
195	1290	8.96	950	2.5							
158	1600	11.08	540	1.15	**iP 372 – HB3 112 M 4 B12E**	2	115	125	120	130	260
168	1500	10.42	540	1.2							
195	1290	8.97	545	1.3							
218	1150	8.01	540	1.35							
260	970	6.74	515	1.3							
289	870	6.05	510	1.4							
336	750	5.21	505	1.5							
357	705	4.9	500	1.55							
415	610	4.22	490	1.65							
464	545	3.77	485	1.75							

P_1 = 5.4 hp

9.3	36700	189.92	6830	1.15	**iP 973 – HB3 112 MB 4 B30F**	3	445	465	510	530	272
10	33800	174.87	7040	1.25							
11	30200	156.3	7270	1.45							
13	27200	140.71	7460	1.6							

(1) Finite transmission ratio i

P_1 = 5.4 hp

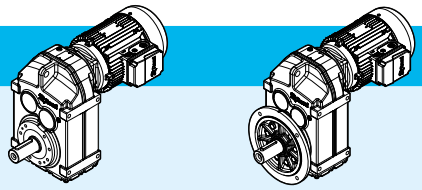

n_2 rpm	T_2 lb in	i	F_{r2} lb	SF			lb foot HB	lb foot HBZ	lb flange HB	lb flange HBZ	p.
14	24600	127.42	7600	1.75	iP 973 – HB3 112 MB 4 B30F	3	445	465	510	530	272
16	21800	112.99	7750	1.95							
17	19800	102.16	7860	2.2							
18	18900	97.58	7900	2.3							
20	17400	89.85	7970	2.4							
20	16700	86.59	8000	2.5							
22	15500	80.31	8060	2.7							
24	14000	72.29	8120	3							
27	12700	65.47	8030	3.3							
13	25900	134.16	5100	1.15	iP 873 – HB3 112 MB 4 B25F	3	305	325	340	360	270
14	23800	123.29	5430	1.25							
16	21200	109.49	5510	1.4							
18	18900	97.89	5450	1.55							
20	17000	88.01	5380	1.75							
23	14800	76.39	5270	2							
26	13200	68.4	5180	2.2							
31	11000	56.75	5010	2.7							
35	9740	50.36	4900	2.9							
39	8760	45.28	4790	3.1							
26	12900	66.46	3610	1.15	iP 773 – HB3 112 MB 4 B20F	3	215	235	240	260	268
30	11300	58.32	3840	1.35							
32	10700	55.27	3920	1.4							
36	9350	48.37	4070	1.6							
40	8430	43.58	4160	1.75							
46	7390	38.23	4250	1.9							
52	6520	33.74	4310	2.1							
59	5780	29.91	4360	2.3							
69	4940	25.54	4400	2.6							
56	6090	31.51	4340	2.3	iP 772 – HB3 112 MB 4 B20F	2	210	225	230	250	268
61	5560	28.75	4370	2.5							
69	4930	25.5(1)	4400	3.1							
82	4140	21.43	4440	3.6							
89	3810	19.7	4450	4							
52	6580	34.01	2470	1.05	iP 673 – HB3 112 MB 4 B16F	3	155	175	170	190	266
64	5300	27.41	2680	1.35	iP 672 – HB3 112 MB 4 B16F	2	150	170	165	185	266
70	4860	25.13	2740	1.5							
80	4260	22.05	2810	1.7							
84	4040	20.9(1)	2830	1.8							
96	3540	18.29	2880	2.1							
107	3190	16.48	2910	2.3							
122	2800	14.46	2920	2.6							
138	2470	12.76	2920	2.9							
156	2190	11.31	2920	3.3							
182	1870	9.66	2850	3.9							
194	1760	9.08	2770	3							
205	1660	8.6	2730	3.4							
234	1460	7.53	2640	4.2							
259	1310	6.78	2580	4.7							

(1) Finite transmission ratio i

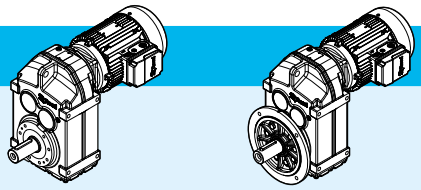

P_1 = 5.4 hp

n_2 rpm	T_2 lb in	i	F_{r2} lb	SF			lb foot HB	lb foot HBZ	lb flange HB	lb flange HBZ	p.
296	1150	5.95	2490	5.3	**iP 672 – HB3 112 MB 4 B16F**	2	150	170	165	185	266
335	1020	5.25	2420	5.7							
378	900	4.66	2340	6.1							
443	770	3.97	2250	6.4							
83	4090	21.17	1450	1.3	**iP 572 – HB3 112 MB 4 B16F**	2	140	160	155	175	264
92	3700	19.11	1440	1.45							
105	3250	16.81	1420	1.65							
111	3070	15.88	1410	1.75							
130	2610	13.52	1380	2							
143	2380	12.29	1360	2.2							
165	2060	10.64	1330	2.6							
189	1800	9.31	1270	2.1							
215	1580	8.19	1240	2.5							
228	1500	7.73	1220	2.7							
267	1270	6.58	1180	3.3							
294	1160	5.98	1160	3.4							
340	1000	5.18	1120	4.1							

P_1 = 7.5 hp

13	37600	140.71	6750	1.15	**iP 973 – HB3 132 M 4 B30G**	3	495	520	570	590	272
14	34000	127.42	7010	1.25							
16	30200	112.99	7260	1.4							
17	27300	102.16	7440	1.55							
18	26100	97.58	7510	1.65							
20	24000	89.85	7630	1.75							
20	23100	86.59	7680	1.85							
22	21400	80.31	7770	1.95							
23	20200	75.63	7810	2.1							
24	19300	72.29	7740	2.2							
27	17500	65.47	7600	2.4							
30	15500	58.06	7420	2.7							
34	14000	52.49	7260	3							
41	11600	43.28	6950	2.6	**iP 972 – HB3 132 M 4 B30G**	2	500	520	570	590	272
48	9790	36.64	6670	3.1							
18	26100	97.89	4730	1.15	**iP 873 – HB3 132 M 4 B25G**	3	360	385	395	420	270
20	23500	88.01	4730	1.25							
23	20400	76.39	4710	1.45							
26	18300	68.4	4680	1.6							
31	15200	56.75	4600	1.95							
35	13400	50.36	4530	2.1							
39	12100	45.28	4460	2.2							
45	10500	39.3	4350	2.5							
50	9400	35.19	4270	2.7							
61	7800	29.2	4110	3							
52	9060	33.92	4240	2.8	**iP 872 – HB3 132 M 4 B25G**	2	350	375	385	410	270
62	7680	28.78	4100	3.1							
67	7080	26.5	4020	4.2							
75	6320	23.68	3930	4.7							

(1) Finite transmission ratio i

P_1 = 7.5 hp

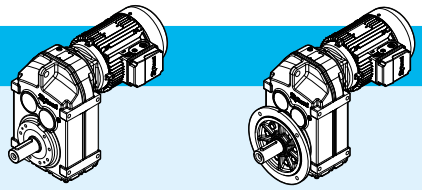

n_2 rpm	T_2 lb in	i	F_{r2} lb	SF			lb foot HB	lb foot HBZ	lb flange HB	lb flange HBZ	p.
37	12900	48.37	3590	1.15	**iP 773 – HB3 132 M 4 B20G**	3	265	285	290	310	268
41	11600	43.58	3780	1.25							
46	10200	38.23	3970	1.4							
52	9010	33.74	4100	1.5							
59	7990	29.91	4190	1.65							
69	6820	25.54	4280	1.9							
69	6810	25.5(1)	4290	2.2	**iP 772 – HB3 132 M 4 B20G**	2	255	280	280	305	268
83	5720	21.43	4360	2.6							
90	5260	19.7	4380	2.9							
101	4670	17.49	4330	3.2							
113	4180	15.64(1)	4220	3.6							
126	3760	14.06	4110	4							
145	3260	12.2	3970	4.6							
80	5890	22.05	2580	1.25	**iP 672 – HB3 132 M 4 B16G**	2	205	230	220	245	266
85	5580	20.9(1)	2630	1.3							
97	4880	18.29	2730	1.5							
107	4400	16.48	2790	1.65							
122	3860	14.46	2850	1.9							
139	3410	12.76	2890	2.1							
157	3020	11.31	2860	2.4							
183	2580	9.66	2770	2.8							
195	2420	9.08	2670	2.2							
206	2300	8.6	2640	2.4							
235	2010	7.53	2560	3							
261	1810	6.78	2500	3.4							
297	1590	5.95	2430	3.8							
337	1400	5.25	2360	4.1							
380	1240	4.66	2290	4.4							
445	1060	3.97	2200	4.7							
105	4490	16.81	1230	1.2	**iP 572 – HB3 132 M 4 B16G**	2	195	220	210	235	264
111	4240	15.88	1230	1.25							
131	3610	13.52	1230	1.45							
144	3280	12.29	1220	1.6							
166	2840	10.64	1210	1.85							
216	2190	8.19	1130	1.8							
229	2070	7.73	1130	1.95							
269	1760	6.58	1100	2.4							
296	1600	5.98	1080	2.5							
341	1380	5.18	1060	3							

P_1 = 10 hp

17	36600	102.16	6850	1.15	**iP 973 – HB3 132 MB 4 B30G**	3	520	540	590	610	272
18	34900	97.58	6960	1.2							
20	32200	89.85	7150	1.3							
20	31000	86.59	7230	1.35							
22	28800	80.31	7250	1.45							
23	27100	75.63	7200	1.55							
24	25900	72.29	7170	1.65							

(1) Finite transmission ratio i

P_1 = 10 hp

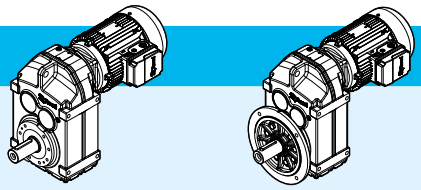

n_2 rpm	T_2 lb in	i	F_{r2} lb	SF			lb foot HB	lb foot HBZ	lb flange HB	lb flange HBZ	p.
27	23400	65.47	7080	1.8	iP 973 – HB3 132 MB 4 B30G	3	520	540	590	610	272
30	20800	58.06	6950	2							
34	18800	52.49	6840	2.2							
40	15900	44.49	6630	2.6							
45	13900	38.86	6460	3							
54	11600	32.5	6210	3.5							
41	15500	43.28	6600	1.95	iP 972 – HB3 132 MB 4 B30G	2	520	550	590	620	272
48	13100	36.64	6380	2.3							
52	12100	33.91	6270	3.4							
58	10900	30.39	6120	3.8							
26	24500	68.4	4080	1.2	iP 873 – HB3 132 MB 4 B25G	3	385	405	420	445	270
31	20300	56.75	4100	1.45							
35	18000	50.36	4080	1.55							
39	16200	45.28	4060	1.65							
45	14100	39.3	4010	1.85							
50	12600	35.19	3960	2							
60	10500	29.2	3850	2.3							
52	12100	33.92	3940	2.1	iP 872 – HB3 132 MB 4 B25G	2	375	395	410	435	270
61	10300	28.78	3840	2.3							
66	9490	26.5	3790	3.1							
74	8480	23.68	3720	3.5							
83	7630	21.32(1)	3640	3.9							
91	6910	19.31	3570	4.3							
103	6130	17.12	3480	4.8							
114	5540	15.48	3400	5.3							
52	12100	33.74	3740	1.15	iP 773 – HB3 132 MB 4 B20G	3	285	310	310	335	268
59	10700	29.91	3920	1.25							
69	9140	25.54	4090	1.4							
69	9130	25.5(1)	4090	1.65	iP 772 – HB3 132 MB 4 B20G	2	280	305	305	330	268
82	7680	21.43	4220	1.95							
89	7050	19.7	4270	2.1							
101	6260	17.49	4180	2.4							
113	5600	15.64(1)	4080	2.7							
125	5040	14.06	3990	3							
144	4370	12.2	3870	3.4							
161	3910	10.93	3770	3.8							
189	3330	9.3	3550	3.2							
213	2960	8.26	3450	3.7							
238	2640	7.39	3360	4.1							
265	2380	6.64	3280	4.5							
305	2060	5.76	3170	5.2							
341	1850	5.16	3080	5.5							
411	1530	4.28	2940	5.9							
96	6550	18.29	2480	1.1	iP 672 – HB3 132 MB 4 B16G	2	230	250	240	265	266
107	5900	16.48	2590	1.25							
122	5180	14.46	2700	1.4							
138	4570	12.76	2780	1.6							
156	4050	11.31	2740	1.8							
182	3460	9.66	2660	2.1							

(1) Finite transmission ratio i

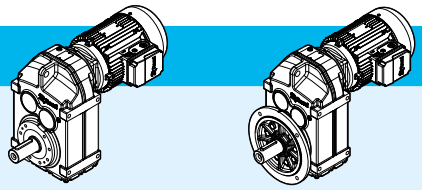

P_1 = 10 hp

n_2 rpm	T_2 lb in	i	F_{r2} lb	SF			lb foot HB	lb foot HBZ	lb flange HB	lb flange HBZ	p.
194	3250	9.08	2550	1.65	**iP 672 – HB3 132 MB 4 B16G**	2	230	250	240	265	266
205	3080	8.6	2520	1.8							
234	2700	7.53	2460	2.3							
259	2430	6.78	2410	2.5							
296	2130	5.95	2350	2.9							
335	1880	5.25	2290	3.1							
378	1670	4.66	2230	3.3							
130	4840	13.52	1050	1.1	**iP 572 – HB3 132 MB 4 B16G**	2	215	240	230	255	264
143	4400	12.29	1060	1.2							
165	3810	10.64	1070	1.4							
215	2930	8.19	1010	1.35							
228	2770	7.73	1010	1.45							
267	2360	6.58	1000	1.8							
294	2140	5.98	990	1.85							
340	1860	5.18	980	2.2							

P_1 = 12.3 hp

20	38000	86.59	6670	1.1	**iP 973 – HB3 132 MC 4 B30H**	3	520	540	590	610	272
22	35300	80.31	6670	1.2							
23	33200	75.63	6650	1.25							
24	31800	72.29	6640	1.35							
27	28800	65.47	6600	1.45							
30	25500	58.06	6530	1.65							
34	23100	52.49	6450	1.8							
40	19500	44.49	6310	2.1							
45	17100	38.86	6170	2.4							
54	14300	32.5	5980	2.9							
52	14900	33.91	6030	2.8	**iP 972 – HB3 132 MC 4 B30H**	2	520	550	590	620	272
58	13300	30.39	5900	3.1							
64	12100	27.44(1)	5780	3.4							
71	10900	24.92	5660	3.7							
31	24900	56.75	3640	1.2	**iP 873 – HB3 132 MC 4 B25H**	3	385	405	420	445	270
35	22100	50.36	3680	1.25							
39	19900	45.28	3700	1.35							
45	17300	39.3	3690	1.5							
50	15500	35.19	3670	1.65							
60	12800	29.2	3620	1.85							
67	11600	26.5	3580	2.5	**iP 872 – HB3 132 MC 4 B25H**	2	375	395	410	435	270
75	10400	23.68	3530	2.9							
83	9360	21.32(1)	3470	3.2							
91	8480	19.31	3410	3.5							
103	7520	17.12	3340	3.9							
114	6800	15.48	3280	4.4							
135	5760	13.12(1)	3170	5.1							
59	13100	29.91	3570	1	**iP 773 – HB3 132 MC 4 B20H**	3	285	310	310	335	268
69	11200	25.54	3850	1.15							
90	8650	19.7	4130	1.75	**iP 772 – HB3 132 MC 4 B20H**	2	280	305	305	330	268
101	7680	17.49	4050	1.95							

(1) Finite transmission ratio i

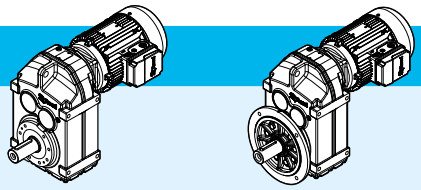

P_1 = 12.3 hp

n_2 rpm	T_2 lb in	i	F_{r2} lb	SF			lb foot HB	lb foot HBZ	lb flange HB	lb flange HBZ	p.
113	6870	15.64(1)	3960	2.2	**iP 772 – HB3 132 MC 4 B20H**	2	280	305	305	330	268
126	6180	14.06	3880	2.4							
145	5360	12.2	3770	2.8							
162	4800	10.93	3690	3.1							
190	4090	9.3	3460	2.6							
214	3630	8.26	3370	3							
239	3240	7.39	3290	3.3							
266	2920	6.64	3210	3.7							
306	2530	5.76	3110	4.3							
342	2270	5.16	3030	4.5							
412	1880	4.28	2900	4.8							

P_1 = 15 hp

25	38500	72.29	6020	1.1	**iP 973 – HB3 160 M 4 B30H**	3	405	405	475	475	272
27	34900	65.47	6040	1.2							
31	30900	58.06	6030	1.35							
34	28000	52.49	6010	1.5							
40	23700	44.49	5930	1.75							
46	20700	38.86	5840	2							
55	17300	32.5	5700	2.4							
52	18100	33.91	5740	2.3	**iP 972 – HB3 160 M 4 B30H**	2	405	405	475	475	272
58	16200	30.39	5640	2.5							
65	14600	27.44(1)	5540	2.8							
71	13300	24.92	5450	3.1							
80	11800	22.11	5320	3.4							
39	24100	45.28	3270	1.1	**iP 873 – HB3 160 M 4 B25H**	3	265	265	300	300	270
45	20900	39.3	3320	1.25							
50	18700	35.19	3340	1.35							
61	15500	29.2	3340	1.55							
67	14100	26.5	3330	2.1	**iP 872 – HB3 160 M 4 B25H**	2	255	255	290	290	270
75	12600	23.68	3300	2.4							
83	11400	21.32(1)	3270	2.6							
92	10300	19.31	3230	2.9							
104	9120	17.12	3180	3.3							
115	8240	15.48	3130	3.6							
135	6990	13.12(1)	3040	4.2							
90	10500	19.7	3940	1.45	**iP 772 – HB3 160 M 4 B20H**	2	155	155	180	180	268
101	9320	17.49	3890	1.6							
113	8330	15.64(1)	3820	1.8							
126	7490	14.06	3760	2							
145	6500	12.2	3670	2.3							
162	5820	10.93	3590	2.6							
191	4950	9.3	3350	2.2							
215	4400	8.26	3280	2.5							
240	3930	7.39	3210	2.7							
267	3540	6.64	3140	3.1							
308	3070	5.76	3050	3.5							
344	2750	5.16	2970	3.7							
415	2280	4.28	2850	3.9							

(1) Finite transmission ratio i

P_1 = 20 hp

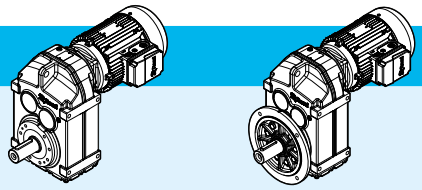

n_2 rpm	T_2 lb in	i	F_{r2} lb	SF			lb foot HB	lb foot HBZ	lb flange HB	lb flange HBZ	p.
34	37300	52.49	5180	1.1	iP 973 – HB3 160 L 4 B30H	3	405	405	475	475	272
40	31600	44.49	5230	1.3							
46	27600	38.86	5230	1.5							
55	23100	32.5	5190	1.8							
52	24100	33.91	5200	1.7	iP 972 – HB3 160 L 4 B30H	2	405	405	475	475	272
58	21600	30.39	5160	1.9							
65	19500	27.44(1)	5110	2.1							
71	17700	24.92	5050	2.3							
80	15700	22.11	4970	2.6							
88	14300	20.07	4900	2.8							
103	12200	17.25(1)	4770	3.3							
118	10700	15.06	4650	3.8							
139	9070	12.77	4500	4.4							
159	7930	11.16	4360	4.9							
61	20700	29.2	2840	1.15	iP 873 – HB3 160 L 4 B25H	3	265	265	300	300	270
67	18800	26.5	2870	1.6	iP 872 – HB3 160 L 4 B25H	2	255	255	290	290	270
75	16800	23.68	2890	1.75							
83	15100	21.32(1)	2900	1.95							
92	13700	19.31	2900	2.2							
104	12200	17.12	2880	2.4							
115	11000	15.48	2860	2.7							
135	9320	13.12(1)	2810	3.1							
155	8140	11.46	2770	3.5							
185	6810	9.58	2690	4.1							
214	5890	8.29	2560	2.6							
241	5220	7.35	2510	2.9							
267	4720	6.65	2460	3.2							
315	4000	5.63	2380	3.8							
361	3490	4.92	2310	4.3							
431	2920	4.12	2220	4.7							

P_1 = 25 hp

46	34400	38.86	4620	1.2	iP 973 – HB3 180 M 4 B30L	3	405	405	475	475	272
55	28800	32.5	4670	1.45							
65	24300	27.44(1)	4670	1.7	iP 972 – HB3 180 M 4 B30L	2	405	405	475	475	272
71	22100	24.92	4660	1.85							
80	19600	22.11	4620	2.1							
89	17800	20.07	4580	2.3							
103	15300	17.25(1)	4500	2.6							
118	13300	15.06	4410	3							
139	11300	12.77	4290	3.5							
159	9880	11.16	4190	3.9							
196	8020	9.06	3910	2.9							
216	7280	8.22	3840	3.2							
83	18900	21.32(1)	2530	1.55	iP 872 – HB3 180 M 4 B25L	2	255	255	290	290	270
92	17100	19.31	2560	1.75							
104	15200	17.12	2580	1.95							
115	13700	15.48	2590	2.2							

(1) Finite transmission ratio i

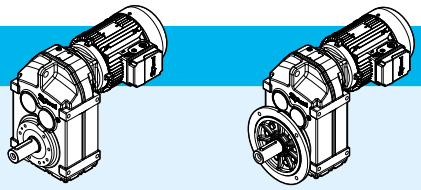

P_1 = 25 hp

n_2 rpm	T_2 lb in	i	F_{r2} lb	SF			lb foot HB	lb foot HBZ	lb flange HB	lb flange HBZ	p.
136	11600	13.12(1)	2590	2.5	**iP 872 – HB3 180 M 4 B25L**	2	255	255	290	290	270
155	10100	11.46	2570	2.8							
186	8480	9.58	2520	3.3							
215	7340	8.29	2400	2							
242	6510	7.35	2370	2.3							
268	5880	6.65	2330	2.6							
316	4990	5.63	2270	3							
362	4360	4.92	2210	3.5							
432	3640	4.12	2140	3.8							

P_1 = 30 hp

55	34500	32.5	4160	1.2	**iP 973 – HB3 180 L 4 B30L**	3	405	405	475	475	272
65	29100	27.44(1)	4240	1.4	**iP 972 – HB3 180 L 4 B30L**	2	405	405	475	475	272
71	26500	24.92	4260	1.55							
80	23500	22.11	4270	1.75							
89	21300	20.07	4260	1.9							
103	18300	17.25(1)	4230	2.2							
118	16000	15.06	4170	2.5							
139	13600	12.77	4090	2.9							
159	11900	11.16	4010	3.3							
196	9630	9.06	3750	2.4							
216	8740	8.22	3690	2.7							
252	7510	7.07	3590	3.1							
83	22600	21.32(1)	2160	1.3	**iP 872 – HB3 180 L 4 B25L**	2	255	255	290	290	270
92	20500	19.31	2230	1.45							
104	18200	17.12	2290	1.65							
115	16400	15.48	2320	1.8							
136	13900	13.12(1)	2360	2.1							
155	12200	11.46	2370	2.3							
186	10200	9.58	2360	2.7							
215	8810	8.29	2240	1.7							
242	7810	7.35	2230	1.95							
268	7060	6.65	2210	2.1							
316	5980	5.63	2160	2.5							
362	5230	4.92	2120	2.9							
432	4370	4.12	2060	3.2							

P_1 = 40 hp

81	31200	22.11	3580	1.3	**iP 972 – HB3 200 L 4 B30M**	2	420	420	490	490	272
89	28300	20.07	3630	1.45							
103	24400	17.25(1)	3680	1.65							
119	21300	15.06	3700	1.9							
140	18000	12.77	3690	2.2							
160	15800	11.16	3660	2.5							
197	12800	9.06	3420	1.85							
217	11600	8.22	3390	2							
253	9980	7.07	3330	2.3							
289	8710	6.17	3270	2.5							
341	7390	5.23	3180	2.9							
390	6460	4.57	3100	3.1							

(1) Finite transmission ratio i

14

Parallel shaft helical Dimensional drawings - iP

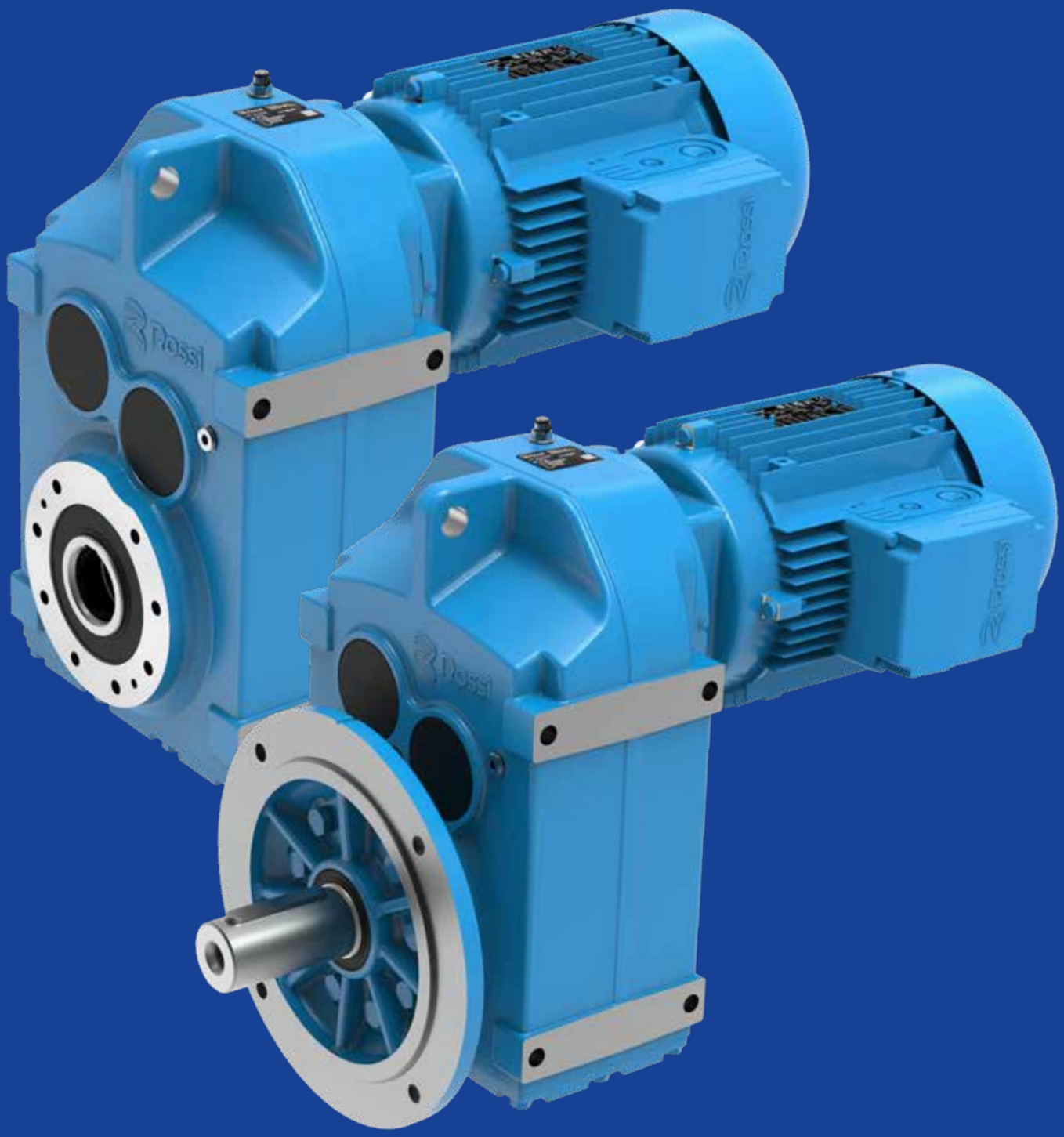

Section contents

14.1	iP 27...	260
14.2	iP 37...	262
14.3	iP 47...	264
14.4	iP 57...	266
14.5	iP 67...	268
14.6	iP 77..	270
14.7	iP 87...	272
14.8	iP 97...	274

14.1

iP 27...PA

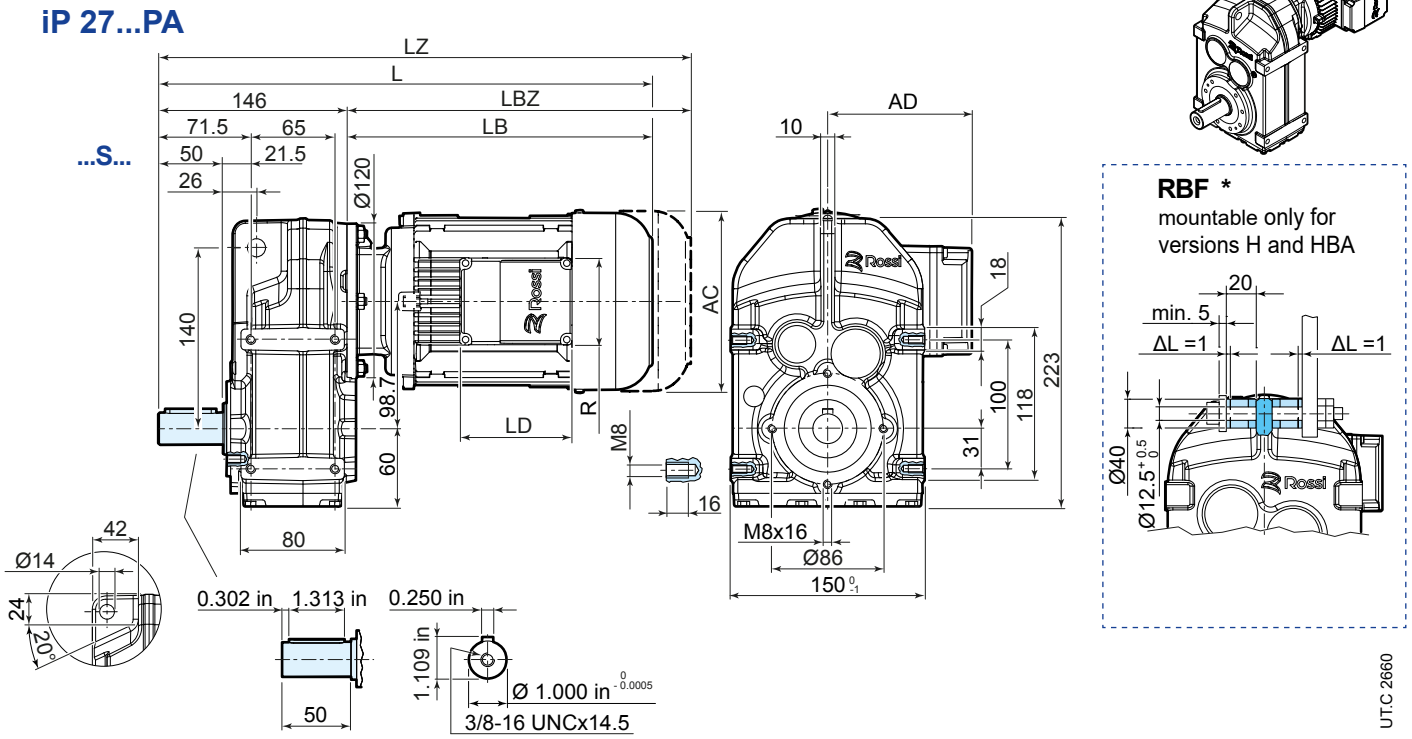

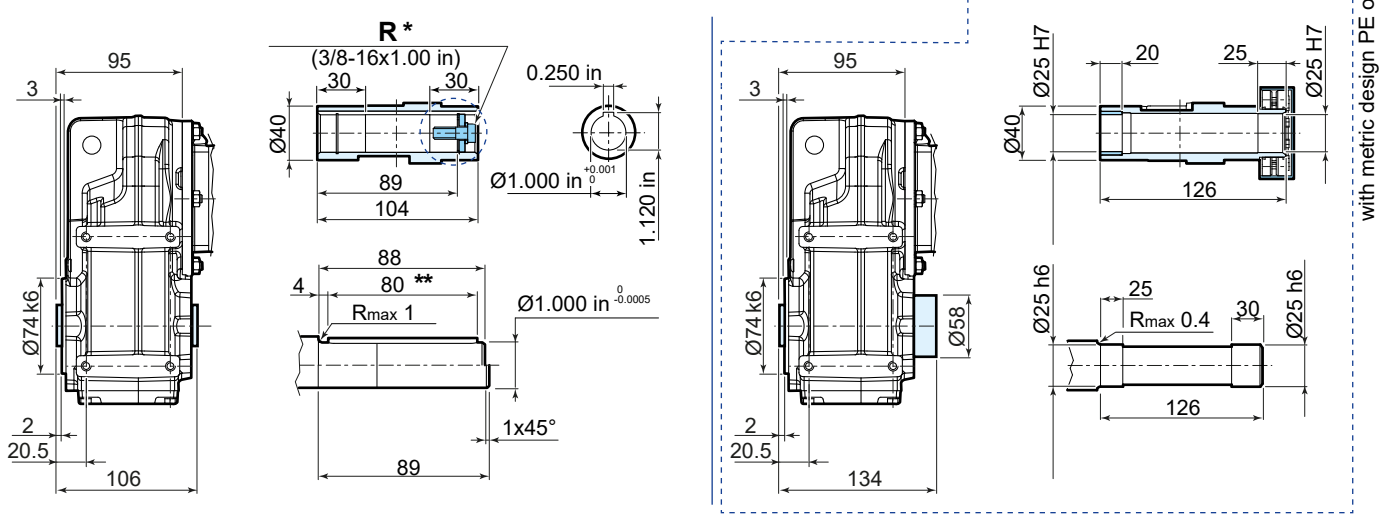

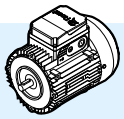

	63	71	80	90S	90L
AC	123	138	156	176	176
AD	95	112	121	141	141
LB	211	237	266	290	320
LBZ	266	299	335	369	399
L [1]	357	383	412	436	466
LZ [1]	412	445	481	515	545
LD	103	103	103	136	136
R	86	86	86	106	106

221
83
274

[1] See also pages 89, 90.
[2] HBA output shaft not available with compact motor sizes 90, 100, 112. Adapter configuration is available for these motor sizes.

* options on request
** both version with key

iP 27... FA

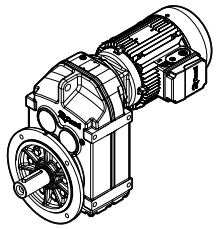

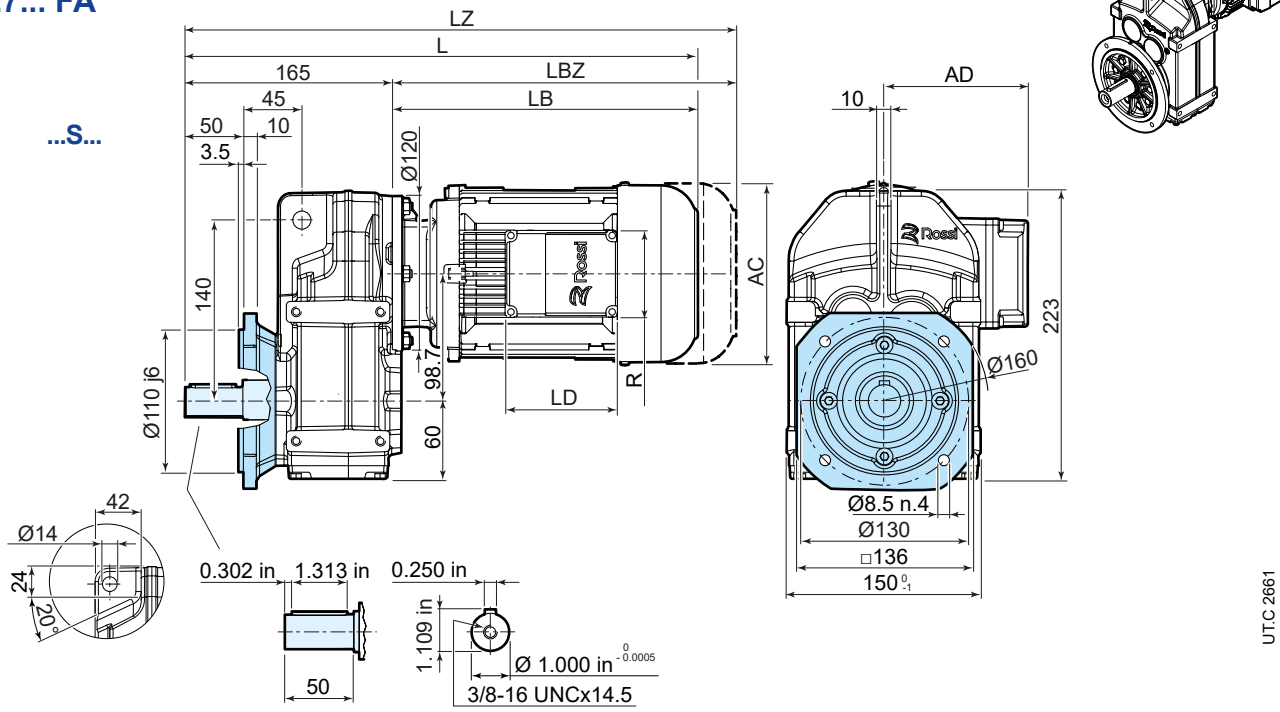

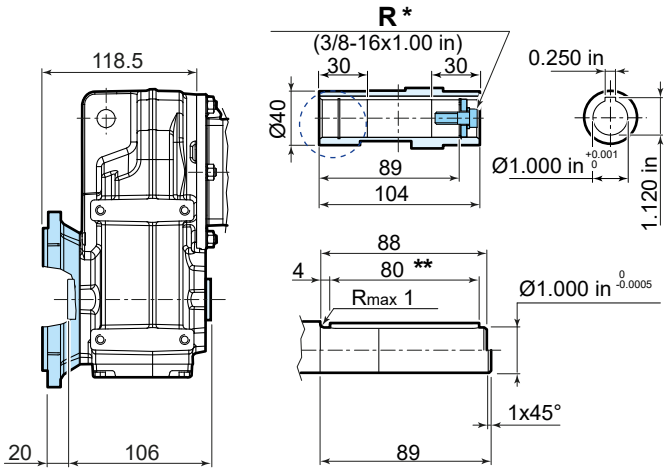

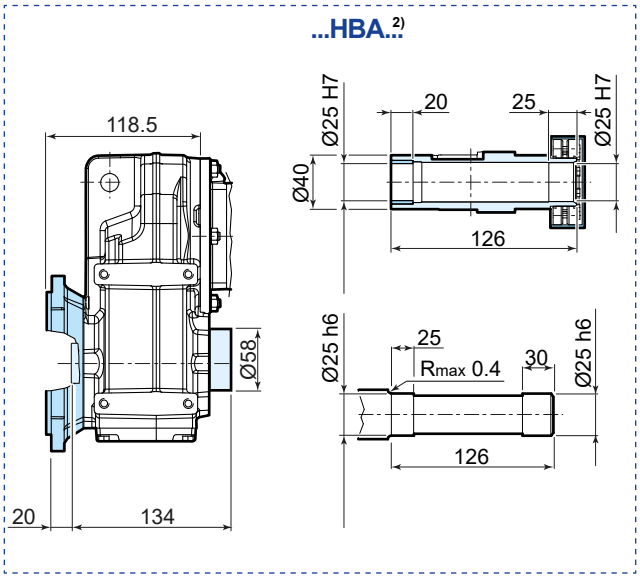

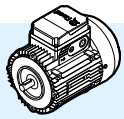

	63	71	80	90S	90L
AC	123	138	156	176	176
AD	95	112	121	141	141
LB	211	237	266	290	320
LBZ	266	299	335	369	399
L [1]	376	402	431	455	485
LZ [1]	431	464	500	534	564
LD	103	103	103	136	136
R	86	86	86	106	106

221
83
274

[1] See also pages 89, 90.
[2] HBA output shaft not available with compact motor size 90, 100, 112. Adapter configuration is available for these motor sizes.

* options on request
** both version with key

14.2

iP 37...PA

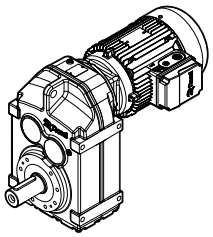

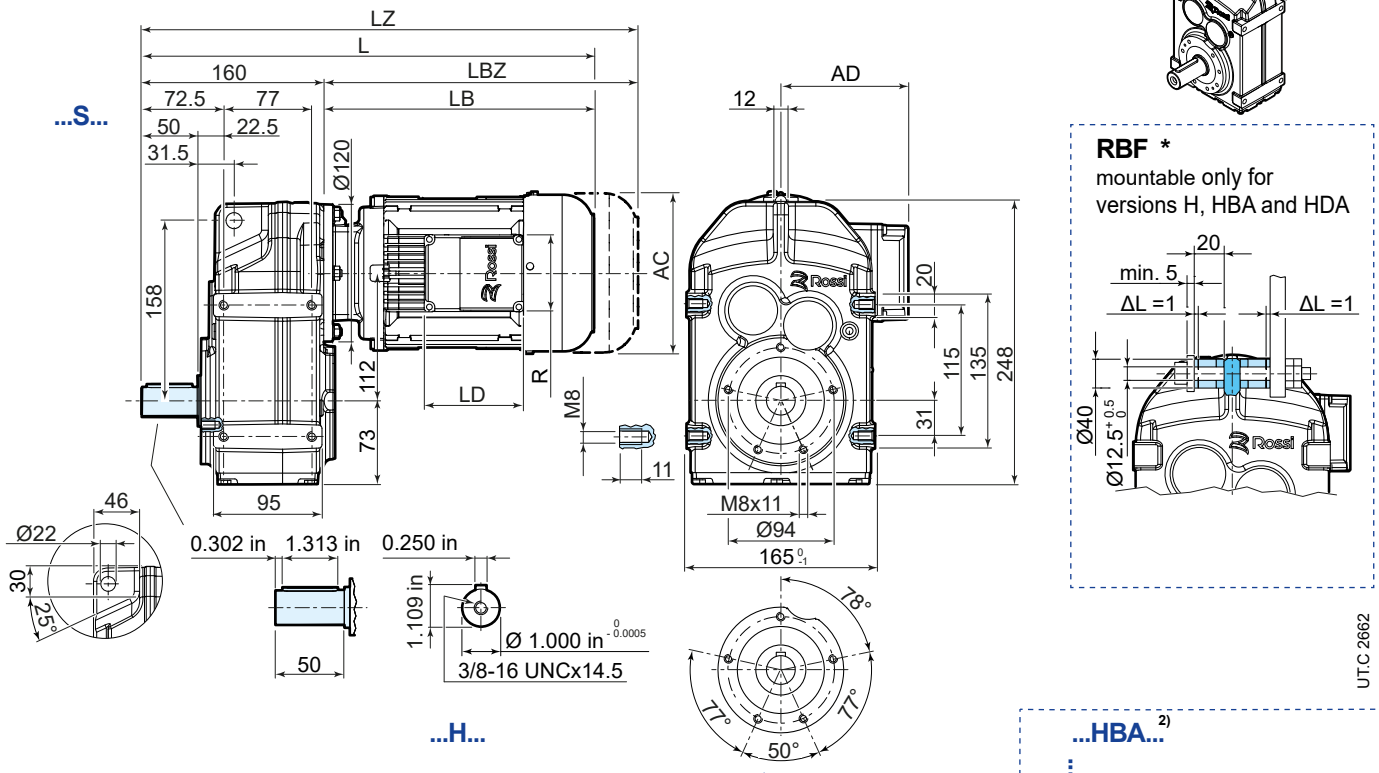

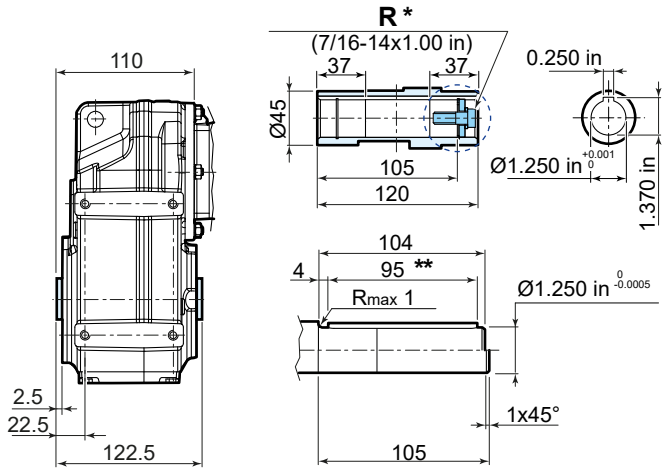

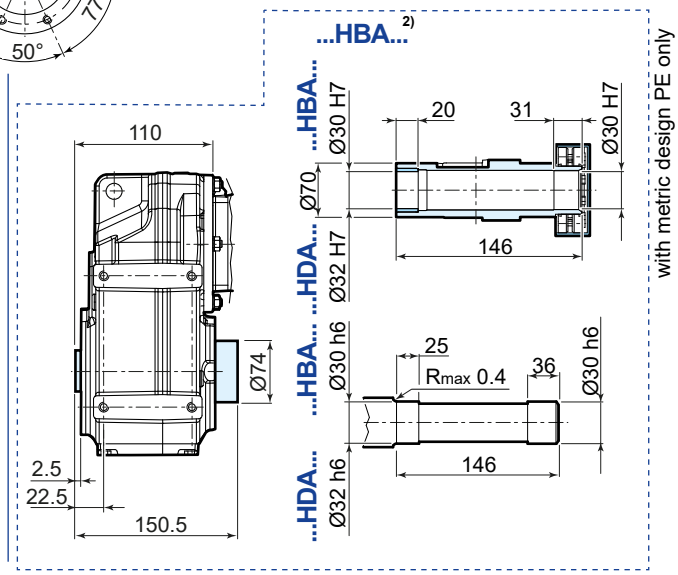

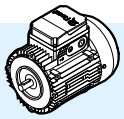	63	71	80	90S	90L	100
AC	123	138	156	176	176	194
AD	95	112	121	141	141	151
LB	211	237	266	290	320	351
LBZ	266	299	335	369	399	446
L [1]	371	397	426	450	480	511
LZ [1]	426	459	495	529	559	606
LD	103	103	103	136	136	136
R	86	86	86	106	106	106

221
83
274

[1] See also pages 89, 90.
[2] HBA-HDA output shaft not available with compact motor sizes 100, 112.
Adapter configuration is available for these motor sizes.

* options on request
** both version with key

iP 37... FA

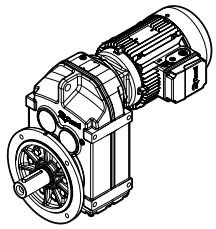

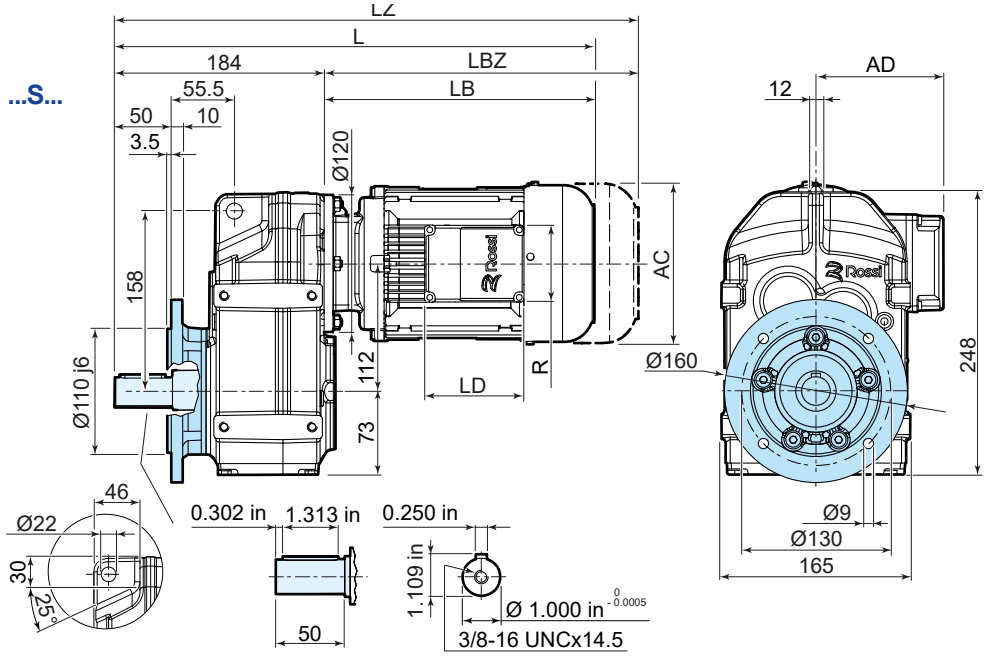

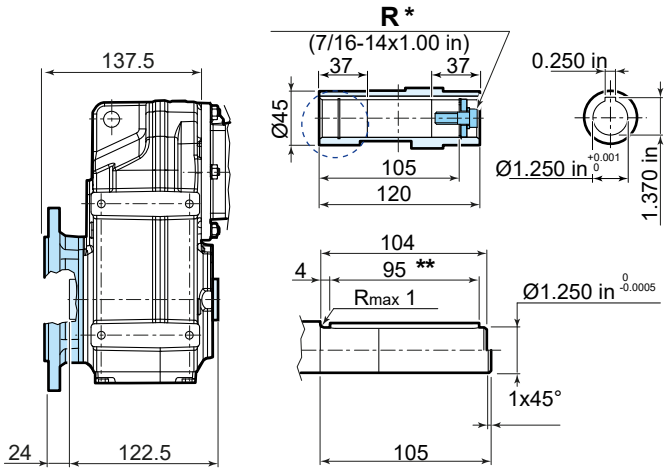

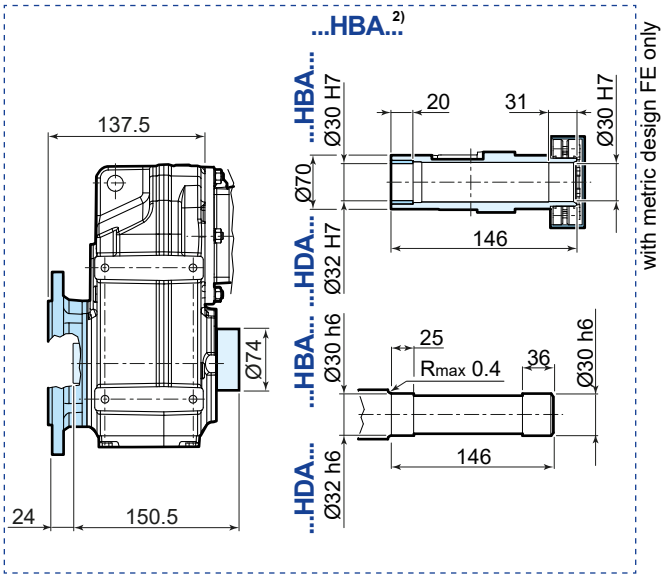

	63	71	80	90S	90L	100
AC	123	138	156	176	176	194
AD	95	112	121	141	141	151
LB	211	237	266	290	320	351
LBZ	266	299	335	369	399	446
L [1]	395	421	450	474	504	535
LZ [1]	450	483	519	553	583	630
LD	103	103	103	136	136	136
R	86	86	86	106	106	106

221
83
274
FB14 88

[1] See also pages 89, 90.
[2] HBA-HDA output shaft not available with compact motor sizes 100, 112. Adapter configuration is available for these motor sizes.

* options on request
** both version with key

14.3

iP 47...PA

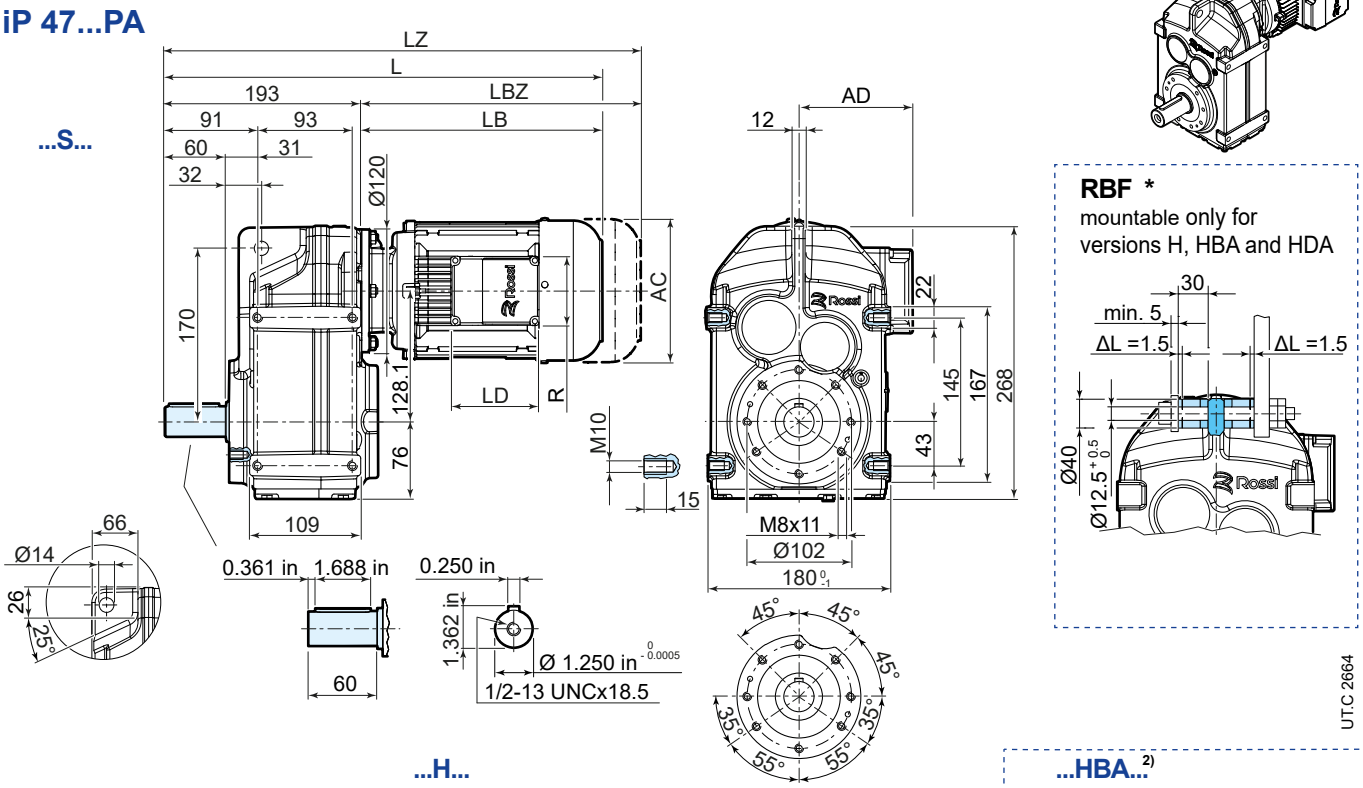

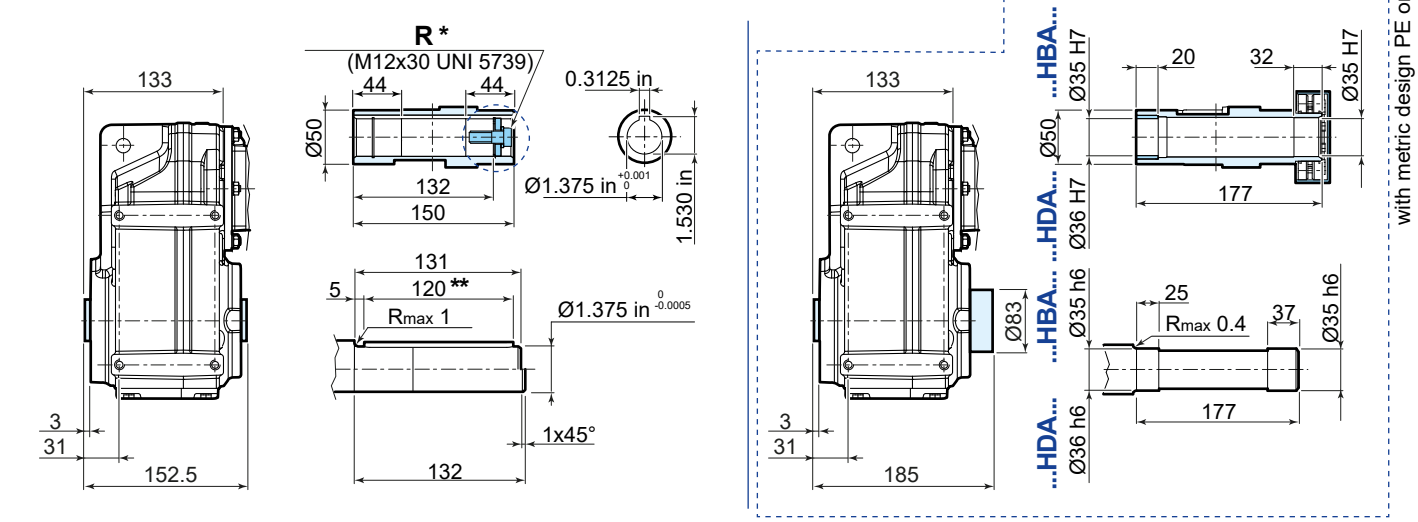

	63	71	80	90S	90L	100
AC	123	138	156	176	176	194
AD	95	112	121	141	141	151
LB	211	237	266	290	320	351
LBZ	266	299	335	369	399	446
L [1]	404	430	459	483	513	544
LZ [1]	459	492	528	562	592	639
LD	103	103	103	136	136	136
R	86	86	86	106	106	106

221
83
274

[1] See also pages 89, 90.
[2] HBA-HDA output shaft not available with compact motor size 112.
Adapter configuration is available for this motor size.

* options on request
** both version with key

iP 47... FA

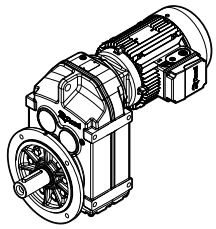

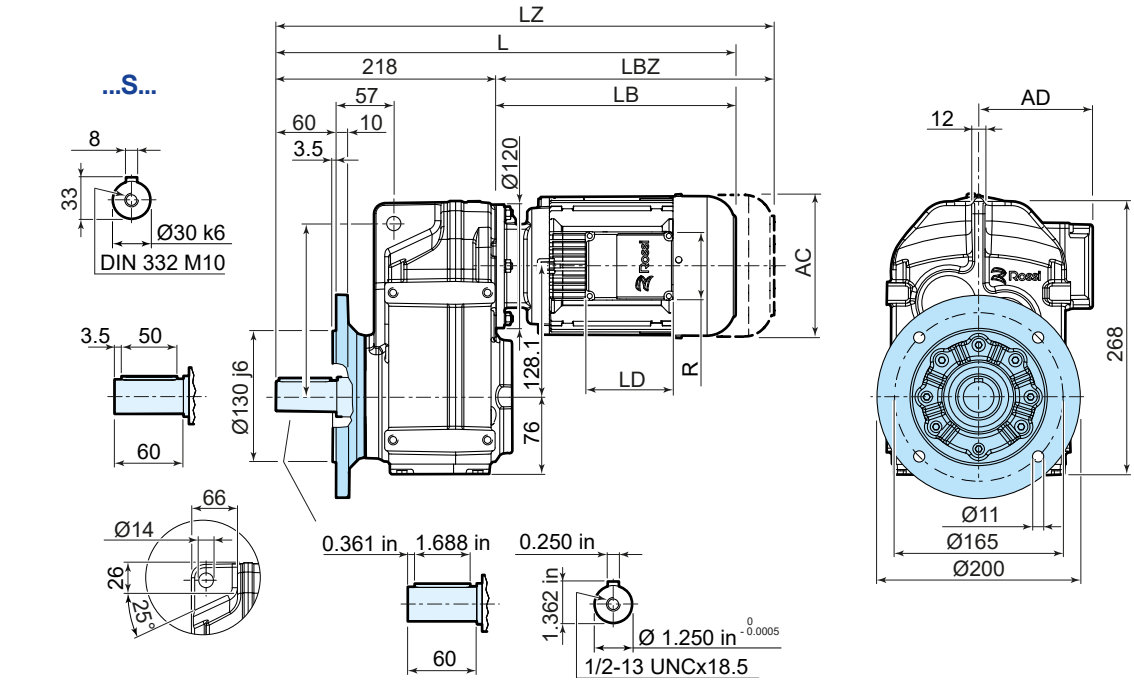

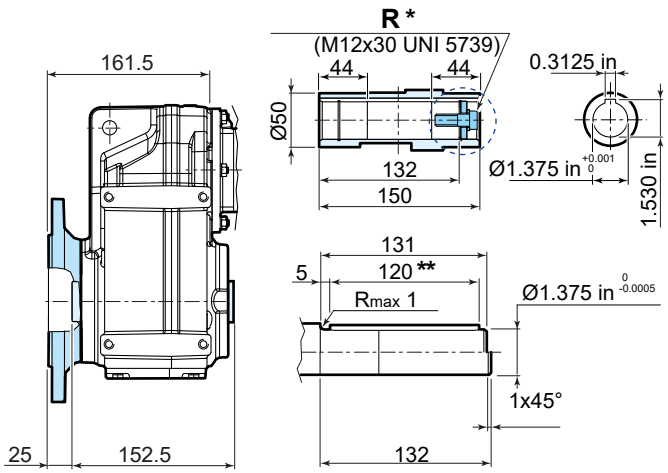

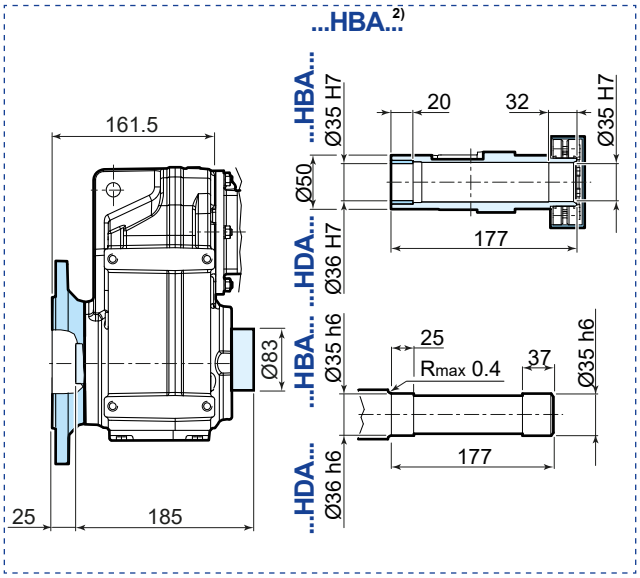

	63	71	80	90S	90L	100
AC	123	138	156	176	176	194
AD	95	112	121	141	141	151
LB	211	237	266	290	320	351
LBZ	266	299	335	369	399	446
L [1]	429	455	484	508	538	569
LZ [1]	484	517	553	587	617	664
LD	103	103	103	136	136	136
R	86	86	86	106	106	106

221
83
274
FB14 88

[1] See also pages 91, 92
[2] HBA-HDA output shaft not available with compact motor size 112.
Adapter configuration is available for this motor size.

* options on request
** both version with key

14.4

iP 57...PA

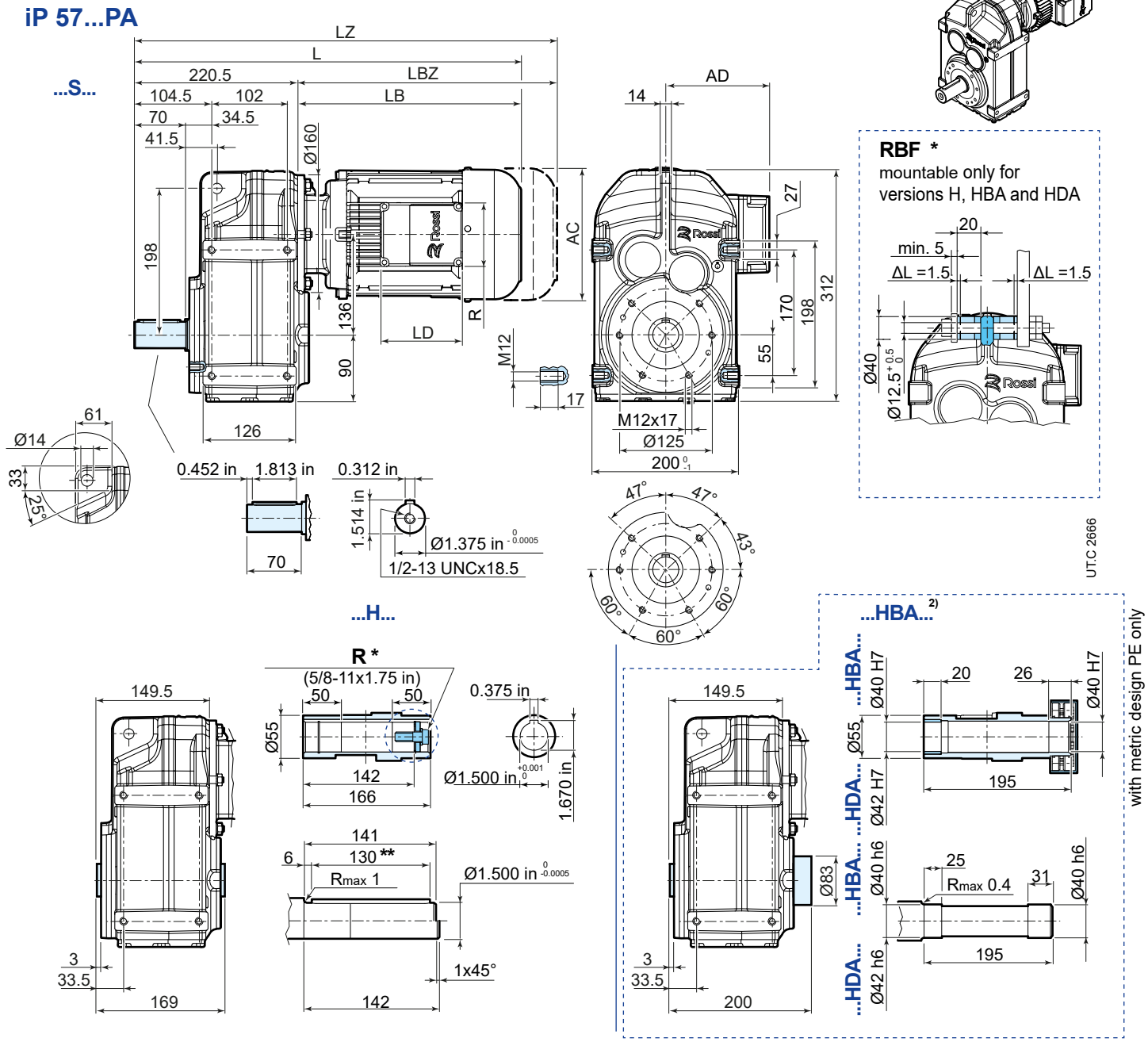

	63	71	80	90S	90L	100	112
AC	123	138	156	176	176	194	218
AD	95	112	121	141	141	151	163
LB	205	231	260	283	313	345	383
LBZ	260	293	329	362	392	440	482
L [1]	425,5	451,5	480,5	503,5	533,5	565,5	603,5
LZ [1]	480,5	513,5	549,5	582,5	612,5	660,5	702,5
LD	103	103	103	136	136	136	136
R	86	86	86	106	106	106	106

221
83
274

[1] See also pages 89, 90.
[2] HBA-HDA output shaft not available with compact motor size 132.
Adapter configuration is available for this motor size.

* options on request
** both version with key

iP 57... FA

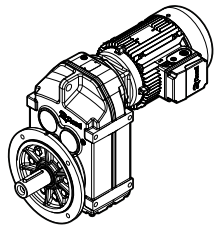

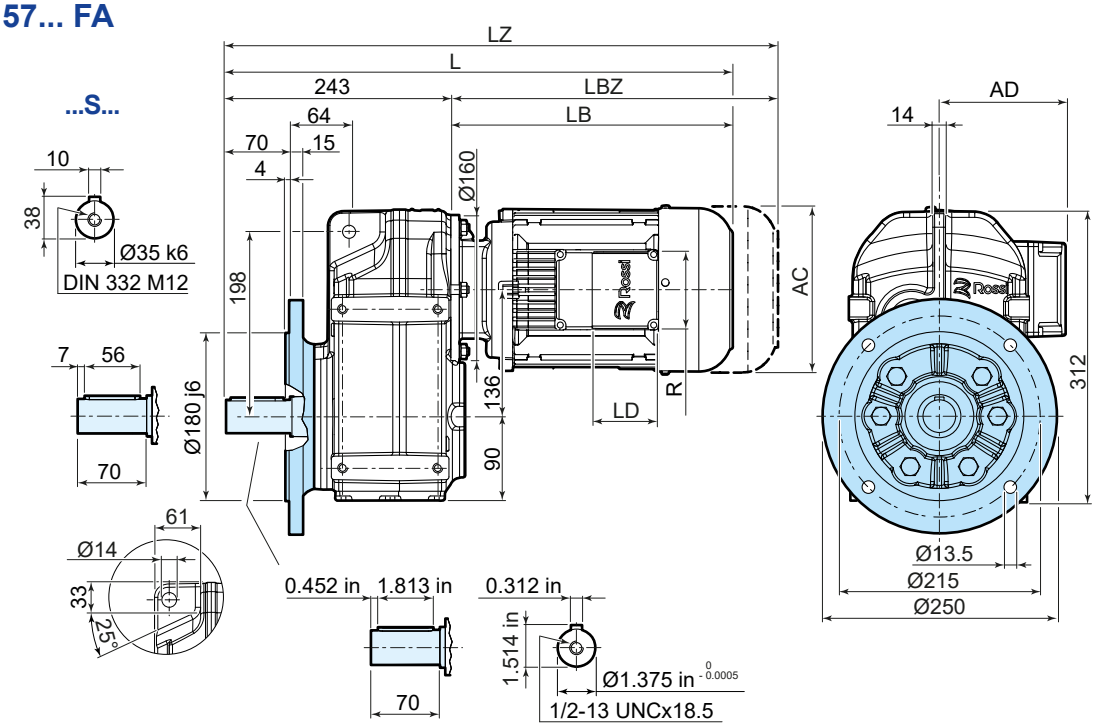

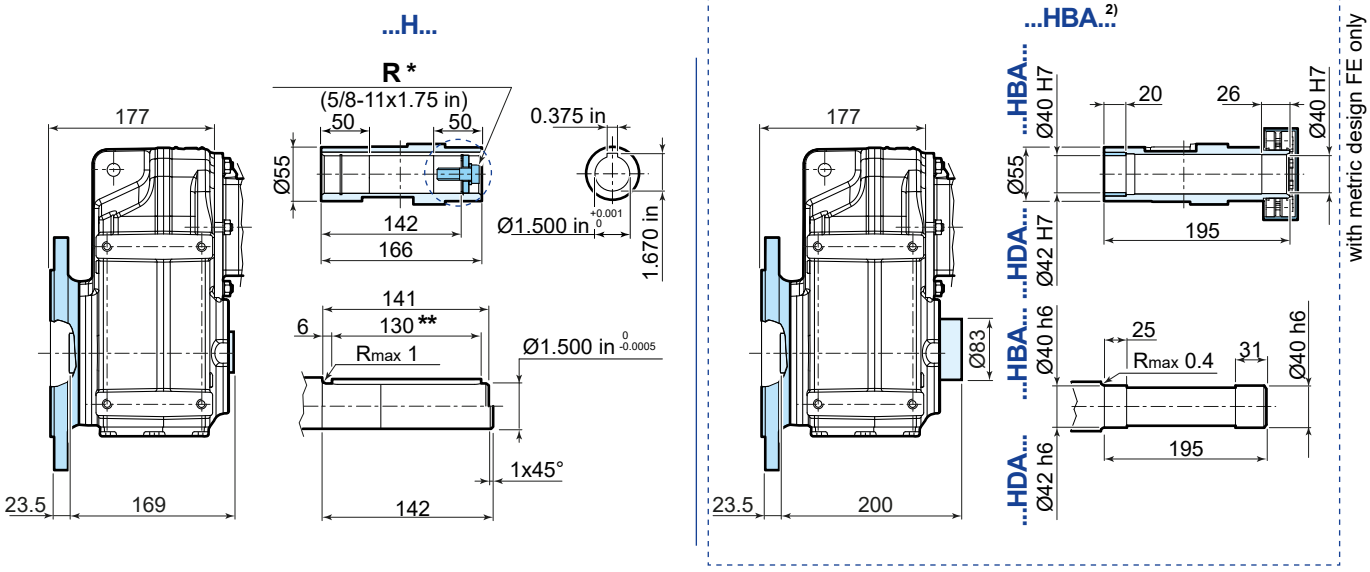

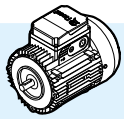

	63	71	80	90S	90L	100	112
AC	123	138	156	176	176	194	218
AD	95	112	121	141	141	151	163
LB	205	231	260	283	313	345	383
LBZ	260	293	329	362	392	440	482
L [1]	448	474	503	526	556	588	626
LZ [1]	503	536	572	605	635	683	725
LD	103	103	103	136	136	136	136
R	86	86	86	106	106	106	106

221
83
274
FB14 88

[1] See also pages 89, 90.
[2] HBA-HDA output shaft not available with compact motor size 132. Adapter configuration is available for this motor size.

* options on request
** both version with key

14.5

iP 67...PA

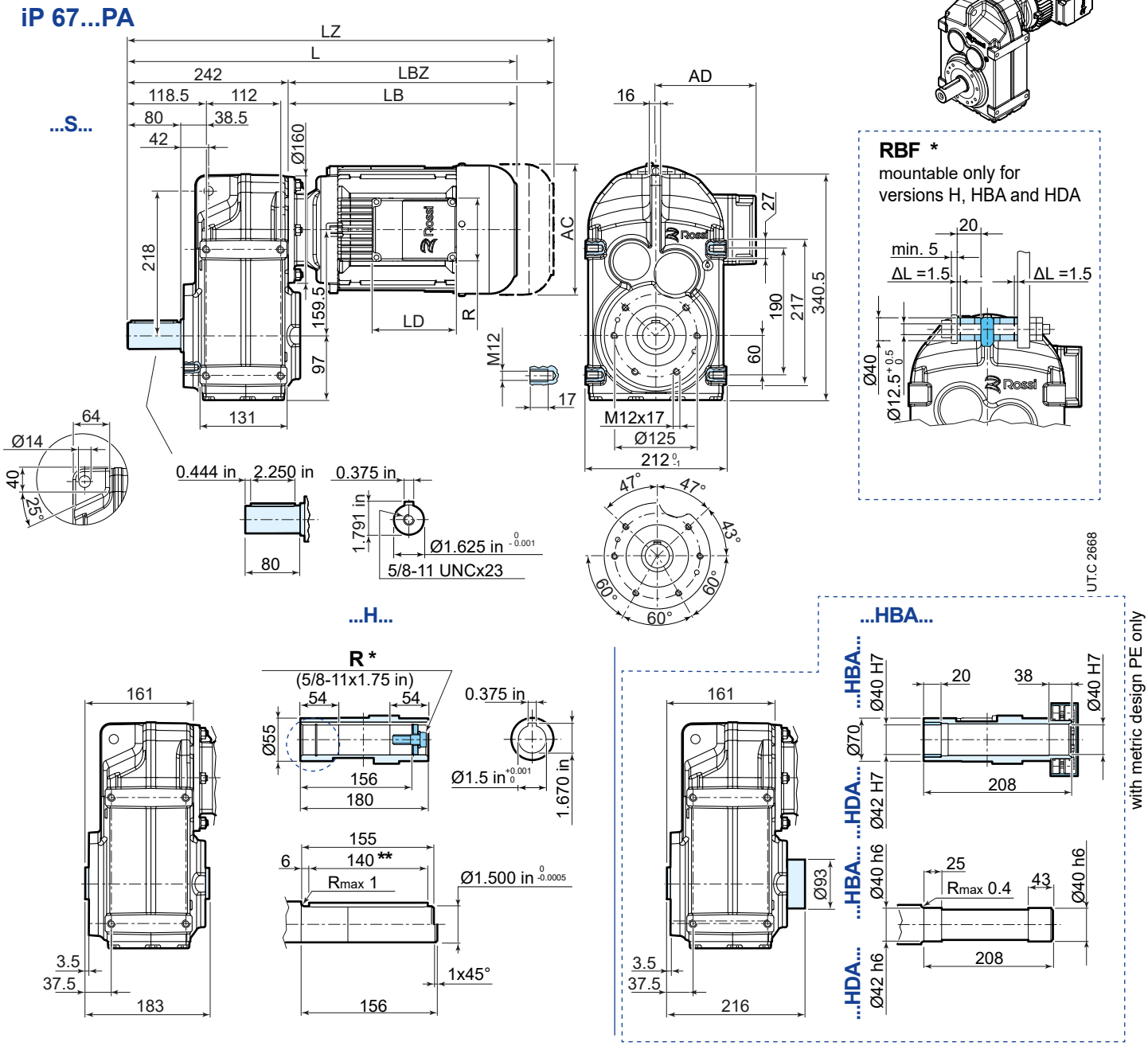

	63	71	80	90S	90L	100	112	132S	132M
AC	123	138	156	176	176	194	218	257	257
AD	95	112	121	141	141	151	163	194	194
LB	205	231	260	283	313	345	383	439	499
LBZ	260	293	329	362	392	440	482	547	607
L [1]	447	473	502	525	555	587	625	681	741
LZ [1]	502	535	571	604	634	682	724	789	849
LD	103	103	103	136	136	136	136	190	190
R	86	86	86	106	106	106	106	148	148

221
83
274

[1] See also pages 89, 90.

* options on request
** both version with key

iP 67... FA

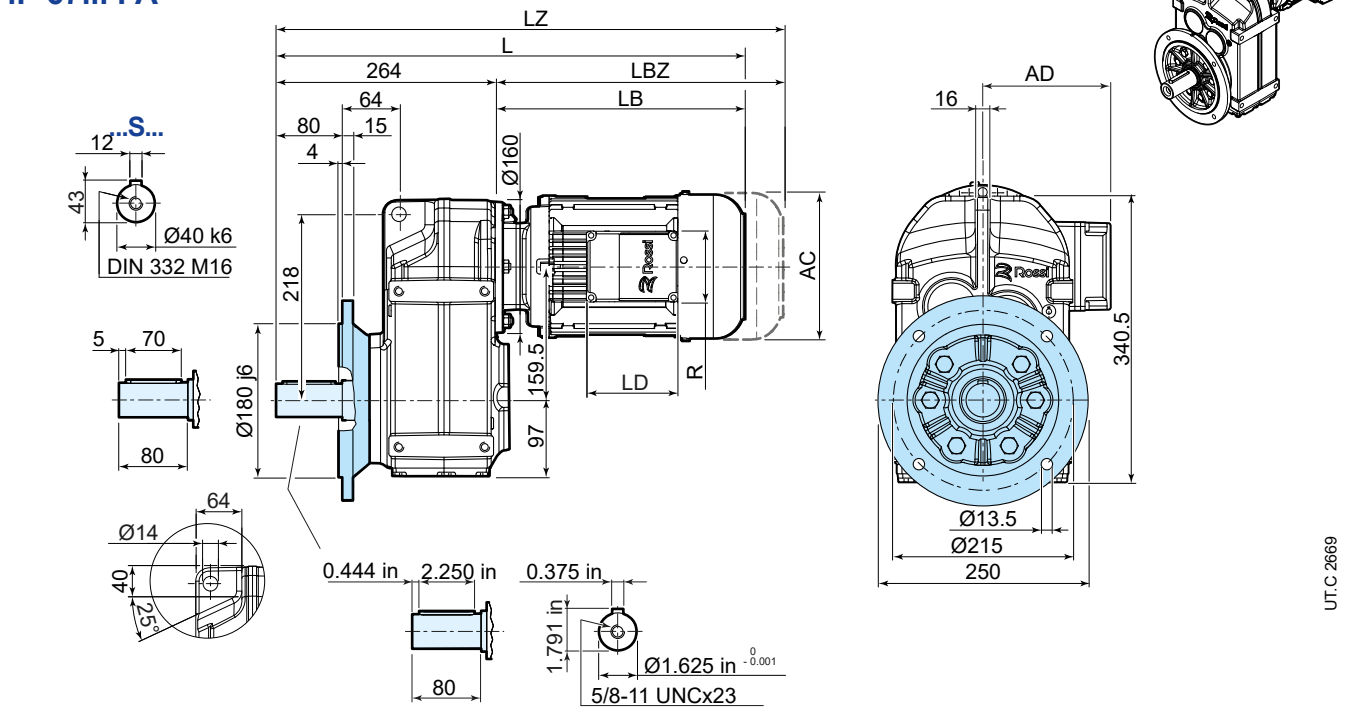

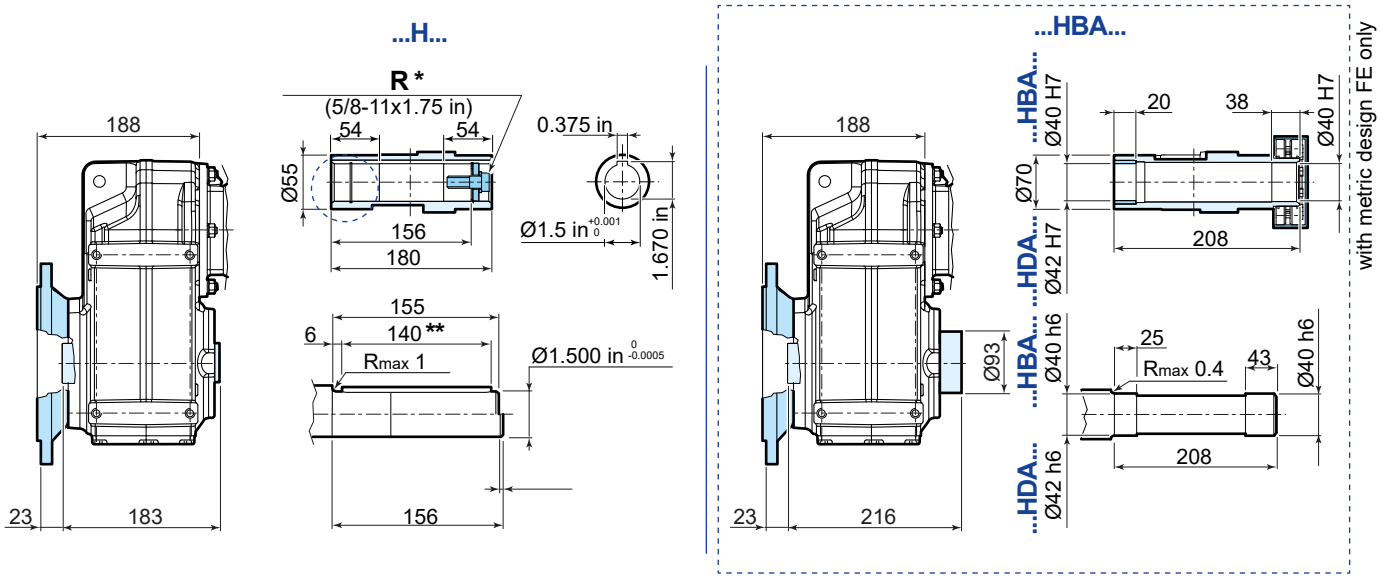

	63	71	80	90S	90L	100	112	132S	132M
AC	123	138	156	176	176	194	218	257	257
AD	95	112	121	141	141	151	163	194	194
LB	205	231	260	283	313	345	383	439	499
LBZ	260	293	329	362	392	440	482	547	607
L [1)]	469	495	524	547	577	609	647	703	763
LZ [1)]	524	557	593	626	656	704	746	811	871
LD	103	103	103	136	136	136	136	190	190
R	86	86	86	106	106	106	106	148	148

221
83
274
FB14 88

[1)] See also pages 89, 90.

* options on request
** both version with key

14.6

iP 77...PA

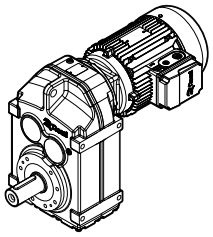

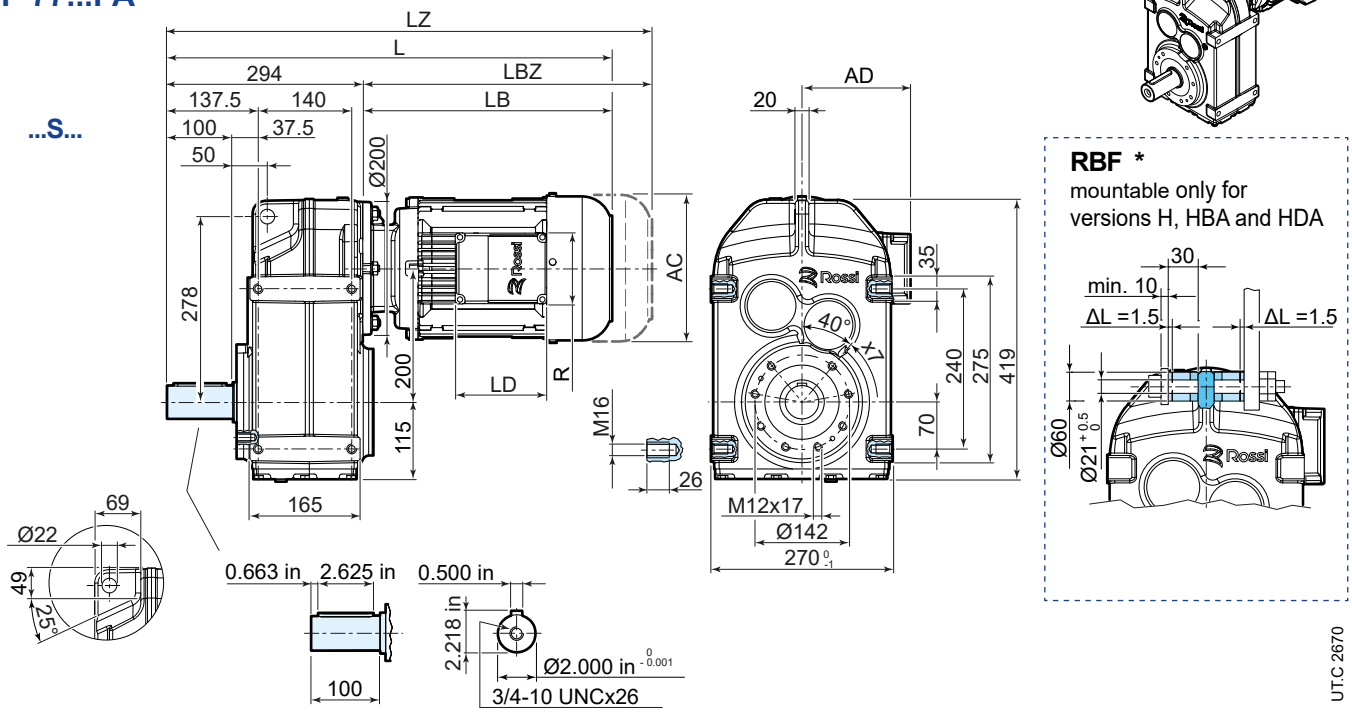

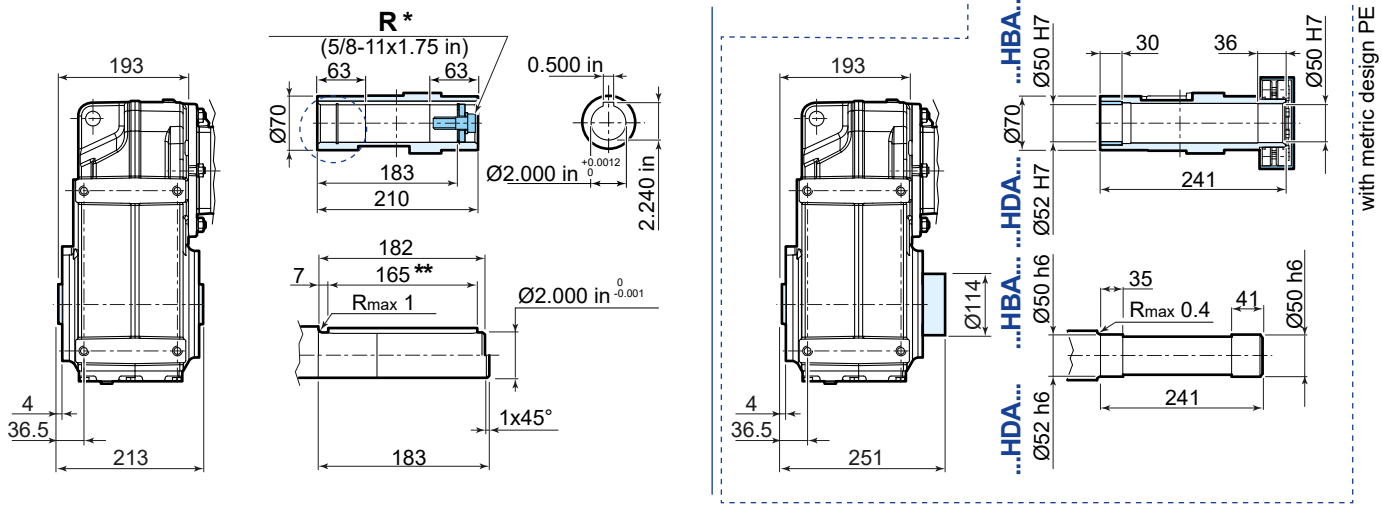

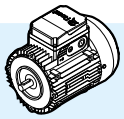

	63	71	80	90S	90L	100	112	132S	132M
AC	123	138	156	176	176	194	218	257	257
AD	95	112	121	141	141	151	163	194	194
LB	199	225	254	276	306	339	377	433	493
LBZ	254	287	323	355	385	434	476	541	601
L [1]	493	519	548	570	600	633	671	727	787
LZ [1]	548	581	617	649	679	728	770	835	895
LD	103	103	103	136	136	136	136	190	190
R	86	86	86	106	106	106	106	148	148

221
83
274

[1] See also pages 89, 90.

* options on request
** both version with key

iP 77... FA

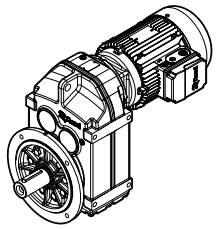

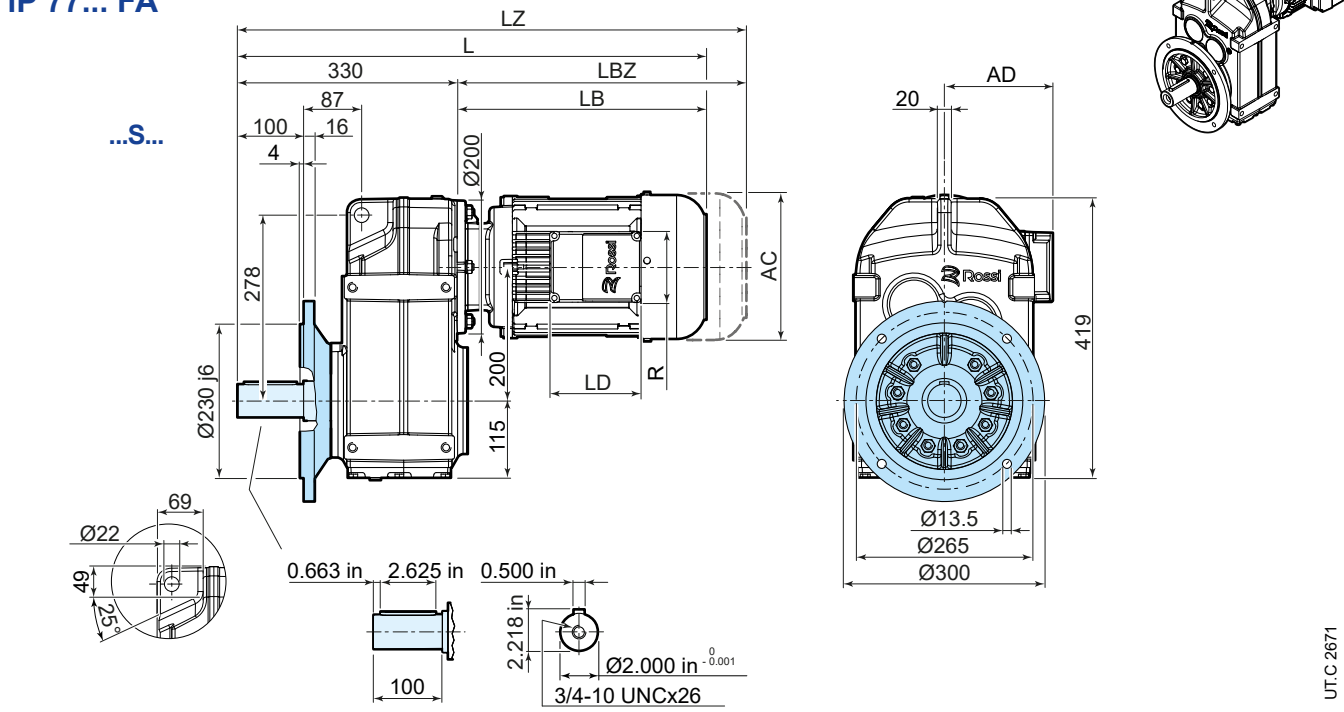

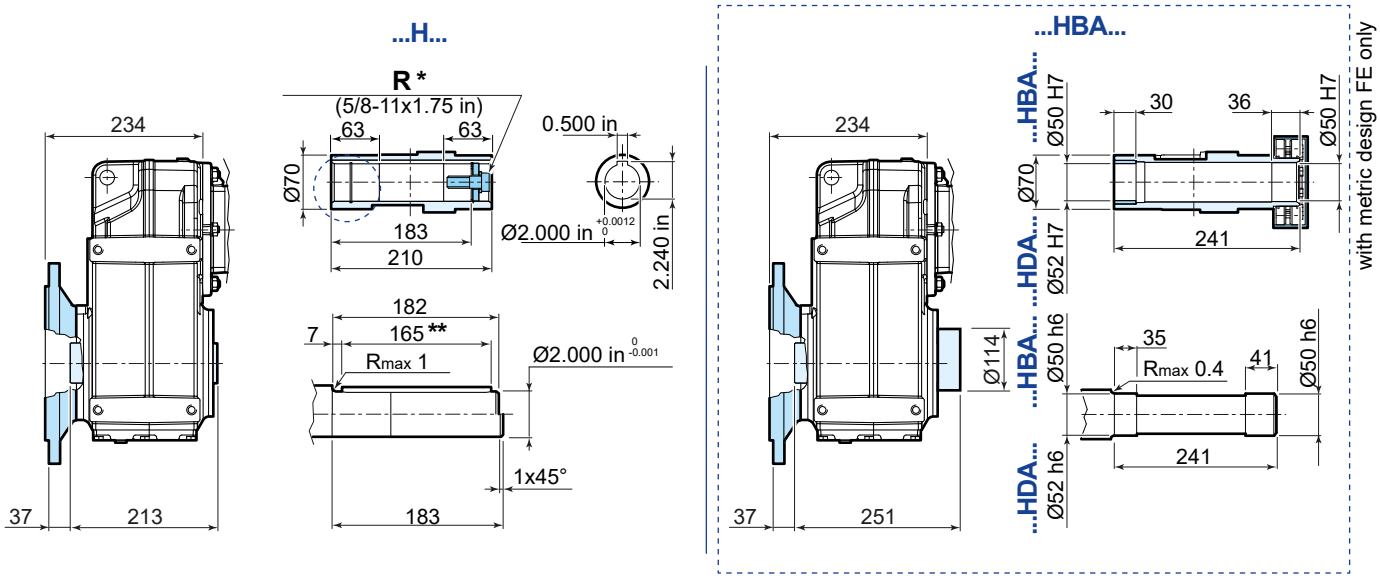

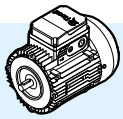

	63	71	80	90S	90L	100	112	132S	132M
AC	123	138	156	176	176	194	218	257	257
AD	95	112	121	141	141	151	163	194	194
LB	199	225	254	276	306	339	377	433	493
LBZ	254	287	323	355	385	434	476	541	601
L [1]	529	555	584	606	636	669	707	763	823
LZ [1]	584	617	653	685	715	764	806	871	931
LD	103	103	103	136	136	136	136	190	190
R	86	86	86	106	106	106	106	148	148

221
83
274
FB14 88

[1] See also pages 89, 90.

* options on request
** both version with key

14.7

iP 87...PA

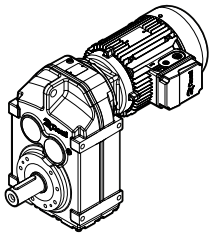

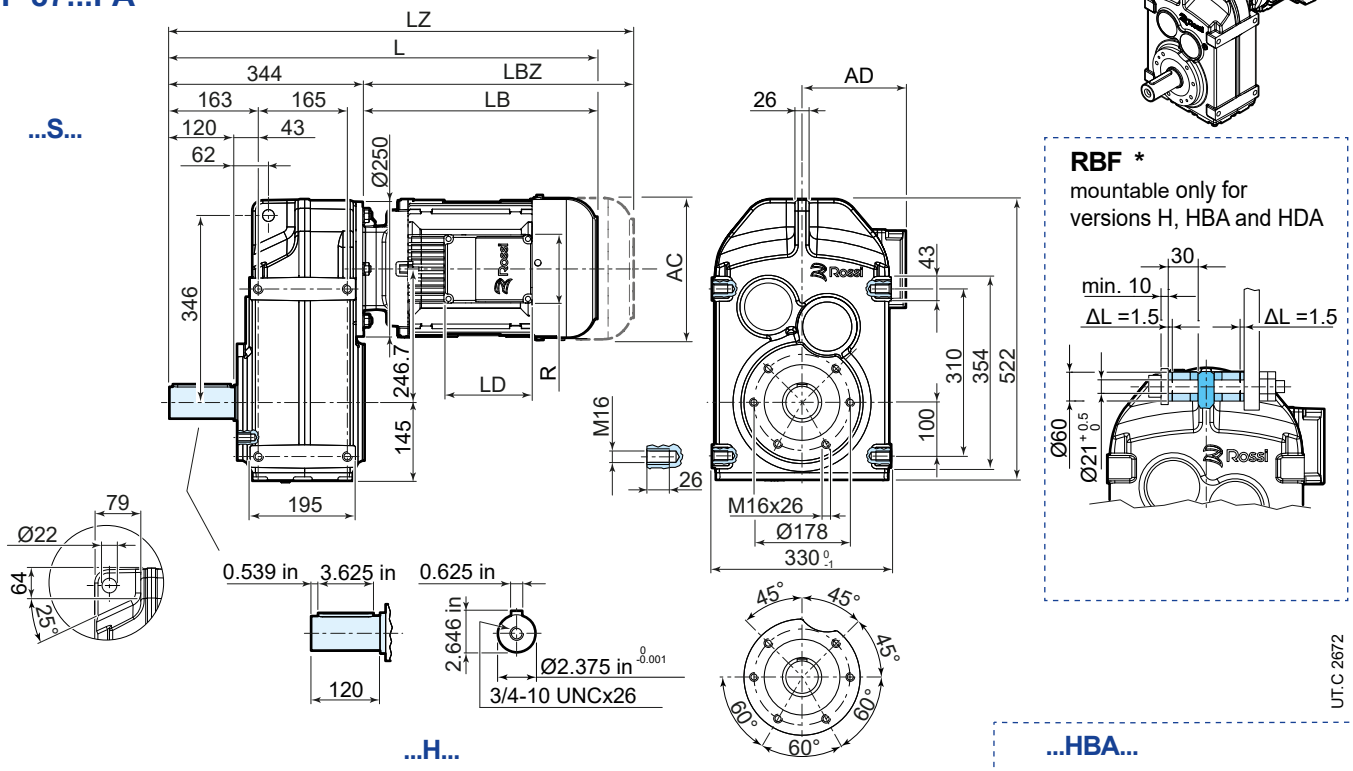

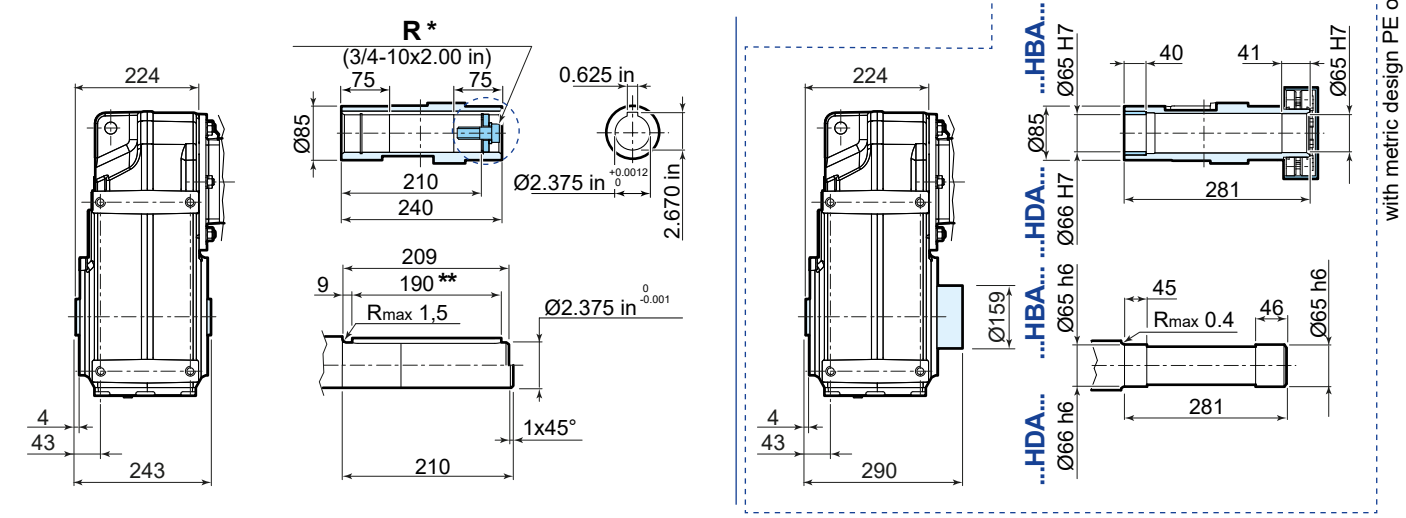

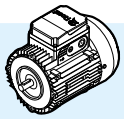

	80	90S	90L	100	112	132S	132M
AC	156	176	176	194	218	257	257
AD	121	141	141	151	163	194	194
LB	249	272	302	334	372	428	488
LBZ	318	351	381	429	471	536	596
L [1)]	593	616	646	678	716	772	832
LZ [1)]	662	695	725	773	815	880	940
LD	103	136	136	136	136	190	190
R	86	106	106	106	106	148	148

[1)] See also pages 89, 90.

221
83
274

* options on request
** both version with key

iP 87... FA

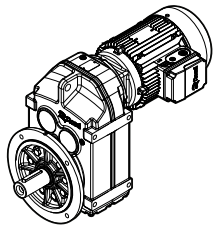

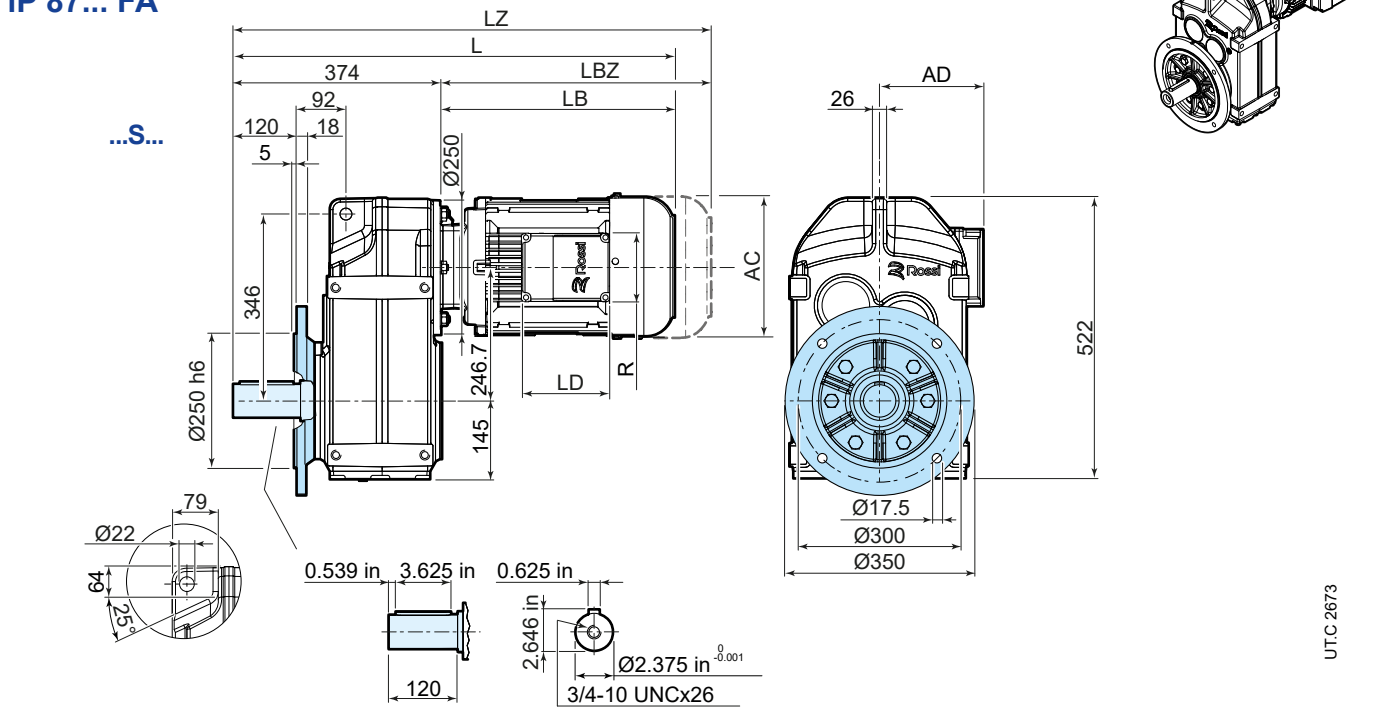

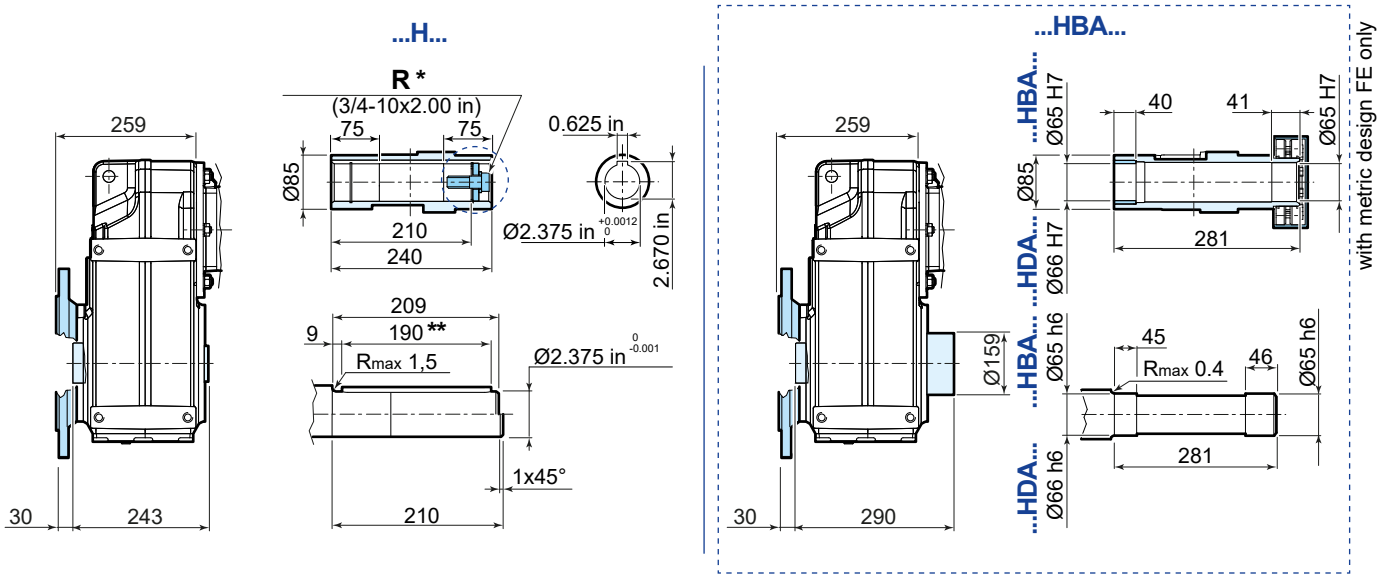

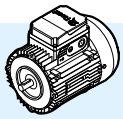

	80	90S	90L	100	112	132S	132M
AC	156	176	176	194	218	257	257
AD	121	141	141	151	163	194	194
LB	249	272	302	334	372	428	488
LBZ	318	351	381	429	471	536	596
L [1]	623	646	676	708	746	802	862
LZ [1]	692	725	755	803	845	910	970
LD	103	136	136	136	136	190	190
R	86	106	106	106	106	148	148

[1] See also pages 89, 90.

221
83
274
FB14 88

* options on request
** both version with key

14.8

iP 97...PA

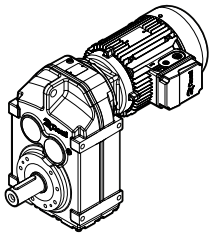

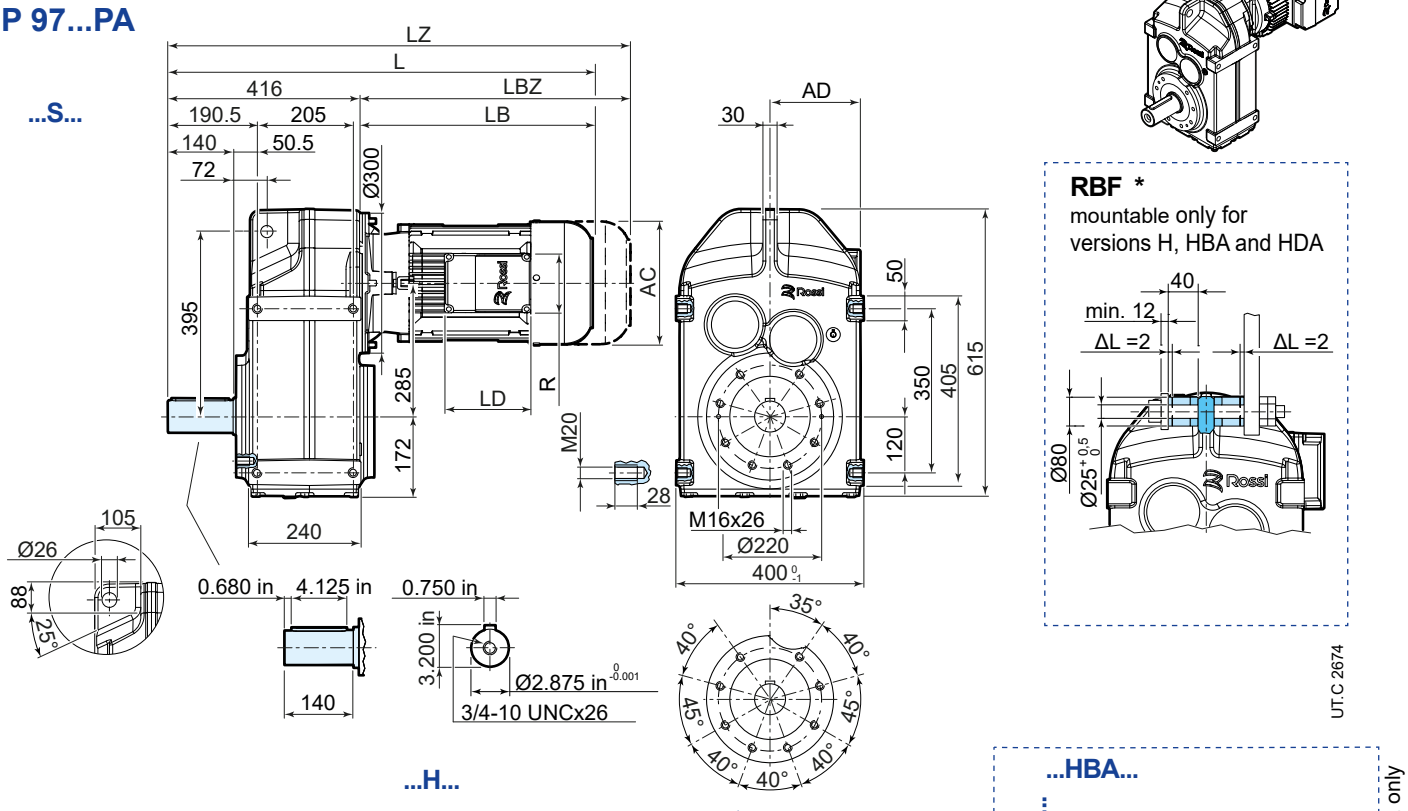

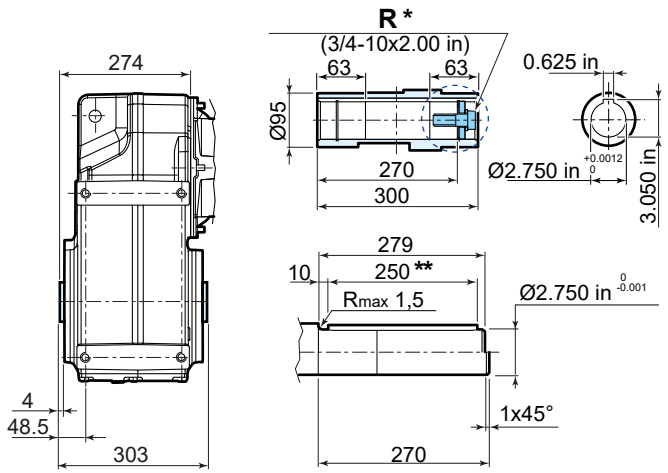

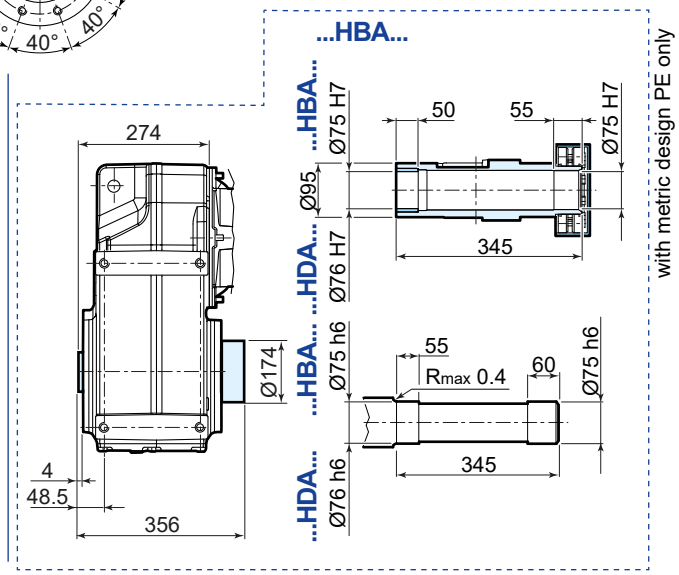

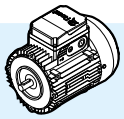

	80	90S	90L	100	112	132S	132M
AC	156	176	176	194	218	257	257
AD	121	141	141	151	163	194	194
LB	241	264	294	327	364	423	483
LBZ	310	343	373	422	463	531	591
L [1]	657	680	710	743	780	839	899
LZ [1]	726	759	789	838	879	947	1007
LD	103	136	136	136	136	190	190
R	86	106	106	106	106	148	148

[1] See also pages 89, 90.

221
83
274

* options on request
** both version with key

iP 97... FA

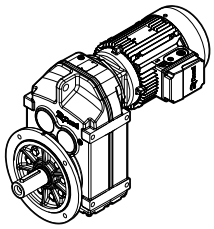

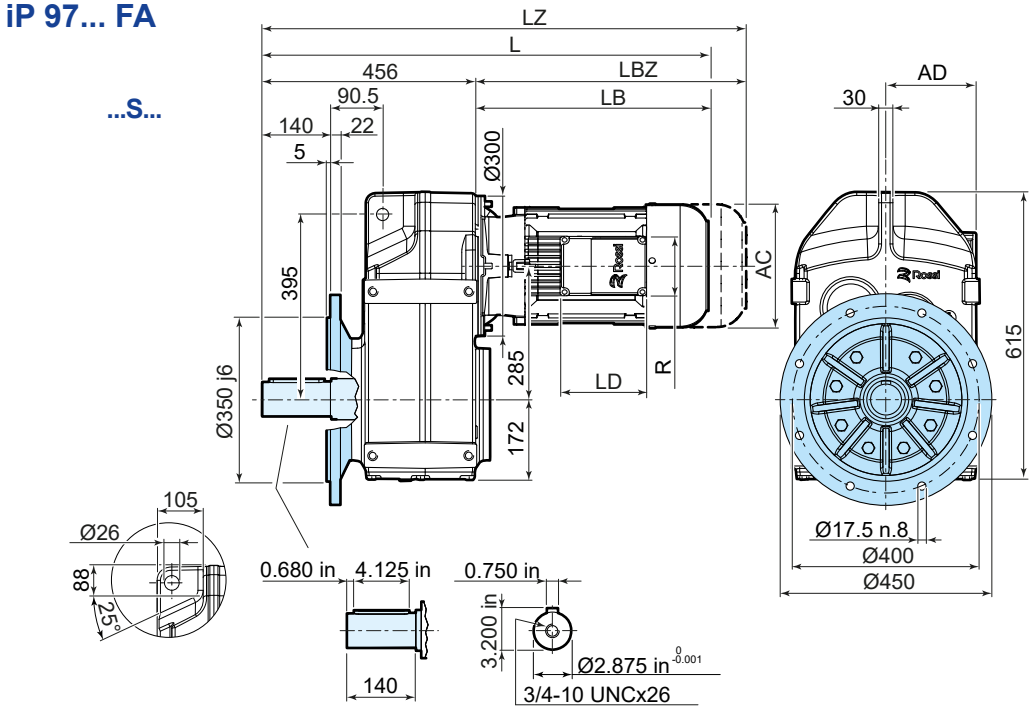

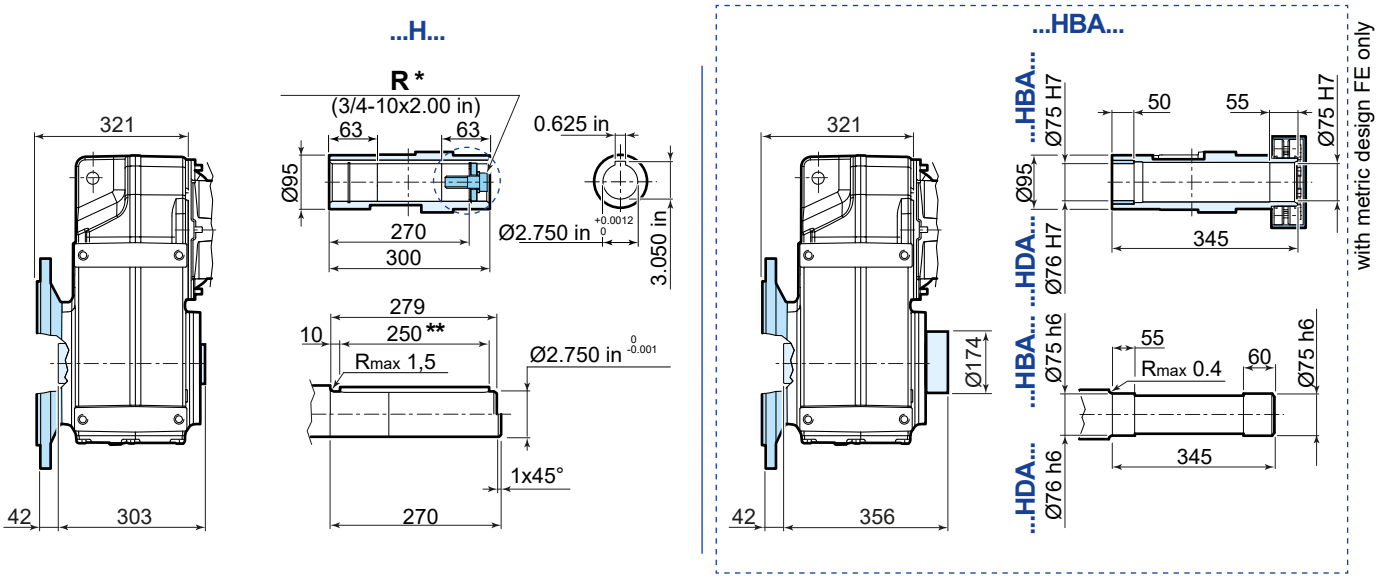

	80	90S	90L	100	112	132S	132M
AC	156	176	176	194	218	257	257
AD	121	141	141	151	163	194	194
LB	241	264	294	327	364	423	483
LBZ	310	343	373	422	463	531	591
L [1)]	697	720	750	783	820	879	939
LZ [1)]	766	799	829	878	919	987	1047
LD	103	136	136	136	136	190	190
R	86	106	106	106	106	148	148

[1)] See also pages 89, 90.

221
83
274
FB14 88

* options on request
** both version with key

15

Compact three-phase motor HB and brake motor HBZ

Section contents

15.1 Compact asynchronous three-phase motor HB 276

13.1.1 General specifications 276

15.2 Technical data of compact asynchronous three-phase motor HB 278

15.3 Compact asynchronous three-phase brake motor HBZ 281

15.3.1 General specifications 281

15.3.2 Brake specifications 283

15.4 Technical data of compact asynchronous three-phase brake motor HBZ 285

15.1

Compact asynchronous three-phase motor HB

15.1.1 General specifications

- **insulation class F**, rise temperature B;
- **mating tolerances under «accuracy» rating;**
- **IP55 protection;**
- **suitable for operation with inverter;**
- asynchronous three-phase **electric motor** with rotor cage, total enclosed, externally ventilated (cooling system IC 411 with cooling fan keyed on motor shaft);
- **single-speed** 4 or 6 poles **motor**;
- particularly strong **construction** (both electrical and mechanical); duly proportioned bearings;
- **«generous» electromagnetic sizing** having margins of safety, good acceleration capacity (high frequency of starting) and uniform starting (slightly «sagged» characteristic curves);
- **metallic terminal box;**
- **designs available** for every application need (independent cooling fan, independent cooling fan and encoder, protections higher than IP 55, etc.)

Standard

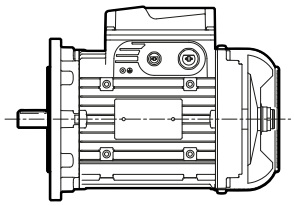

Encoder

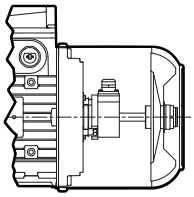

Independent cooling fan

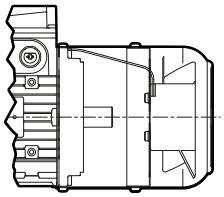

Independent cooling fan and encoder

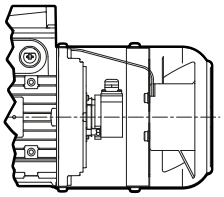

UT.C 1374

Rated power delivered on continuous duty (S1) and referred to nominal voltage and frequency, ambient temperature 5 ÷ 104 °F and maximum altitude 3300 ft.
Motor housing in pressure diecast light alloy.
Drive end and non-drive end end-shield in cast iron or light alloy.
«Supported» tightening attachments of **endshields and flanges** fitted on housing with «tight» coupling.
Ball bearings lubricated «for life» assuming pollution-free surroundings; preload spring.
Motor shaft axially fastened on drive end.
Rear threaded extraction hole as standard for sizes ≥ 90 ... 132.
Steel **fan cover**.
Thermoplastic **cooling fan** with radial vanes.
Terminal box made of light alloy (integral with housing with knockout cable openings on both sides, two holes, one for power cable and one for auxiliary equipment).
Left side position non drive end (pos. TB0 see page 40); on request other positions.
Pressure diecast light alloy **terminal box cover**.
Terminal block with 9 terminals for supply voltage YY230 Y460 60 Hz.
Earth terminal located inside terminal box; prearranged for the installation of further two external earth terminals on housing.

Rotor: pressure diecast cage rotor in aluminium.
Stator winding with class H copper conductor insulation, insulated with double coat, type of impregnation with resin of class H; other materials are of classes F and H for a class F insulation system.
Materials and type of impregnation allow use in tropical climates without further treatments.
Rotor dynamic balancing: vibration velocity under standard rating A. Motors are balanced with half key inserted into shaft extension.
Painting with bi-component water-based acrylic enamel, color blue RAL 5010 DIN 1843, suitable to resist to normal industrial environments (corrosivity class C3 ISO 12944-2).

For non-standard designs and accessories see page 44.

15.2

Technical data of compact asynchronous three-phase motor HB

4 poles - 1700 rpm
IP 55
IC 411
Insulation class F
Temperature rise class B
Service factor SF1.15
9 terminals

IE2
230.460 V - 60Hz
ErP CE c UL us
NEMA MG1-12

P_N (1) hp	P_N (1) kW	Motor	n_N (1) rpm	T_N lb in	I_N A 230 V	I_N A 460 V	PF (1) %	η Nom. Eff. MG 1-12 %	NEMA Code	T_S / T_N	T_{max} / T_N	I_S / I_N	WK_0^2 lb ft²	z_0 start/h	lb
0.16	0.12	**HB2 63 A 4**	1690	6.0	0.84	0.42	58	64	J	3.1	3.1	3.6	0.0047	10000	8.6
0.25	0.18	**HB2 63 B 4**	1680	9.0	1.18	0.59	60	69	J	3.3	3.1	3.8	0.0071	10000	9.9
0.33	0.25	**HB2 71 A 4**	1720	12.3	1.4	0.7	65	70.9	K	2.8	3.3	4.8	0.0166	8000	12.6
0.5	0.37	**HB2 71 B 4**	1720	18.2	1.9	0.95	65	76	K	3.1	3.8	5.3	0.0214	8000	14.6
0.75	0.55	**HB2 80 A 4**	1740	26.6	2.4	1.2	74	78.4	L	3.3	3.7	7.2	0.0500	6300	20

4 poles - 1700 rpm
IP 55
IC 411
Insulation class F
Temperature rise class B
Service factor SF1.15
9 terminals

Premium Efficiency (IE3)
230.460 V - 60Hz
EISA
ENERGY c UL us CC131B

In according with US DOE
10 CFR 431 and CSA C390 EISA ACT
December 19, 2017

P_N (1) hp	P_N (1) kW	Motor	n_N (1) rpm	T_N lb in	I_N A 230 V	I_N A 460 V	PF (1) %	η Nom. Eff. MG 1-12 %	NEMA Code	T_S / T_N	T_{max} / T_N	I_S / I_N	WK_0^2 lb ft²	z_0 start/h	lb
1	0.75 (2)	**HB3 90 S 4**	1740	36.3	3	1.5	73	85.5	K	3.4	4.3	7.2	0.0759	3150	34.2
1.5	1.1 (2)	**HB3 90 L 4**	1740	54	4.2	2.1	75	86.5	K	3.4	4.1	7.7	0.1020	2500	40.8
2	1.5	**HB3 90 LB 4**	1740	73	5.8	2.9	75	86.5	L	3.4	4.4	7.9	0.1020	2500	40.8
3	2.2 (2)	**HB3 112MA 4**	1760	106	8	4	78	89.5	M	3.9	5.1	9.6	0.2847	2000	68.3
4	3 (2)	**HB3 112M 4**	1750	144	10.6	5.3	79	89.5	M	4.1	5.4	9.4	0.3085	1600	72.8
5.4	4	**HB3 112MB 4**	1760	193	15	7.5	75	89.5	N	4.0	5.5	10.3	0.3322	1400	77.2
7.5	5.5 (2)	**HB3 132M 4**	1770	263	19	9.5	79	91.7	L	4.1	4.4	9.7	0.8471	710	127.9
10	7.5	**HB3 132MB 4**	1760	359	25.8	12.9	79	91.7	L	3.7	4.4	9.1	1.0631	710	151
12.3	9.2 (2)	**HB3 132MC 4**	1760	441	33.6	16.8	79	91.7	L	3.7	4.4	9.1	1.0631	710	151

(1) The nameplate contains data expressed in: hp, rpm, PF (power factor) in %.
(2) Power or motor power-to-size correspondence not according to standard.

6 poles - 1200 rpm
IP 55
IC 411
Insulation class F
Temperature rise class B
Service factor SF1.15
9 terminals

IE2
230.460 V - 60Hz
ErP
NEMA MG1-12

P_N (1) hp	P_N (1) kW	Motor	n_N (1) rpm	T_N lb in	I_N A 230 V	I_N A 460 V	PF (1) %	η Nom. Eff. MG 1-12 %	NEMA Code	T_S/T_N	T_{max}/T_N	I_S/I_N	WK_0^2 lb ft²	z_0 start/h	lb
0.16	0.12	**HB2 63 B 6**	1120	9.0	1.04	0.52	53	55.8	J	3.1	3.2	2.9	0.0095	10000	9.9
0.25	0.18	**HB2 71 A 6**	1120	13.5	1.22	0.61	60	62.6	H	3	3.1	3.6	0.0214	10000	13.2
0.33	0.25	**HB2 71 B 6**	1120	18.6	1.62	0.81	60	64.9	J	3.1	3.1	3.9	0.0285	9000	15
0.5	0.37	**HB2 80 A 6**	1130	27.6	2.2	1.1	61	68.4	J	3.3	3.5	4.3	0.0451	7500	17.6
0.75	0.55	**HB2 80 B 6**	1140	40.7	3	1.5	62	75.7	K	3.6	3.7	5.3	0.0760	7100	24.3

6 poles - 1200 rpm
IP 55
IC 411
Insulation class F
Temperature rise class B
Service factor SF1.15
9 terminals

Premium Efficiency (IE3)
230.460 V - 60Hz
EISA
ENERGY
CC131B

In according with US DOE
10 CFR 431 and CSA C390 EISA ACT
December 19, 2017

P_N (1) hp	P_N (1) kW	Motor	n_N (1) rpm	T_N lb in	I_N A 230 V	I_N A 460 V	PF (1) %	η Nom. Eff. MG 1-12 %	NEMA Code	T_S/T_N	T_{max}/T_N	I_S/I_N	WK_0^2 lb ft²	z_0 start/h	lb
1	0.75 (2)	**HB3 100 LA 6**	1160	54	3.2	1.6	71	82.5	M	2.9	4.4	7.9	0.3088	3200	57.3
1.5	1.1 (2)	**HB3 112 M 6**	1160	81	4.4	2.2	73	87.5	J	2.5	3.4	6.3	0.5107	2500	75.0
2	1.5 (2)	**HB3 112 MB 6**	1160	109	6.2	3.1	70	88.5	K	3.0	3.9	6.9	0.5107	2000	75.0
3	2.2 (2)	**HB3 132 S 6**	1170	159	8.6	4.3	72	89.5	K	2.7	3.6	7.3	0.8504	1400	103.6
4	3 (2)	**HB3 132 M 6**	1170	217	11.6	5.8	72	89.5	K	2.8	3.8	7.6	1.0950	1000	123.5

(1) The nameplate contains data expressed in: hp, rpm, PF (power factor) in %.
(2) Power or motor power-to-size correspondence not according to standard.

page intentionally left blank

15.3.1 General specifications

- **Insulation class F**, rise temperature B;
- **mating tolerances under «accuracy» rating;**
- **IP55 protection;**
- **suitable for operation with inverter;**
- **electric asynchronous three-phase brake motor with d.c. brake** (braking in case of supply failure) with **double braking surface with braking torque proportioned to motor torque** (usually $T_b \approx 2\ T_N$);
- **single-speed** 4 or 6, poles **motor**;
- **particularly strong construction** (both electrical and mechanical) to withstand alternating torsional and thermic stresses of starting and braking; duly proportioned bearings;
- **electromagnetic sizing especially studied** to allow high acceleration capacity (high frequency of starting) and uniform starting;
- **large metal terminal box**, multivoltage rectifier, one brake coil, for **voltage always coordinated** with the motor one (both YY and Y);
- **maximum reduced noise level and operation progressivity** (both at starting and braking) thanks to a lower rapidity (typical of d.c. brake) of the anchor (which is lighter and less quick in the impact): motor starts slightly braked i.e. with greater progressivity; good release and braking rapidity; possibility to increase rapidity in braking, with supply opening on d.c. side;
- **high braking capacity;**
- **designs available** for every application need (independent cooling fan, independent cooling fan and encoder, protections higher than IP 55, etc.);
- **particularly suitable** for applications requiring **regular and low-noise starting and braking** and, at the same time, braking with good rapidity and precision and high number of starts.

Standard

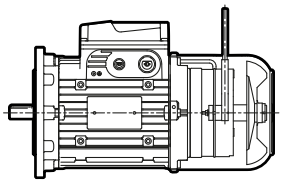

Encoder

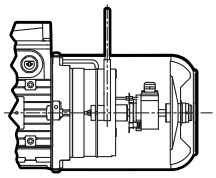

Independent cooling units

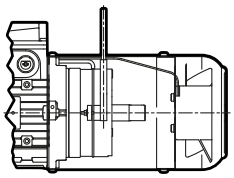

Independent cooling fan and encoder

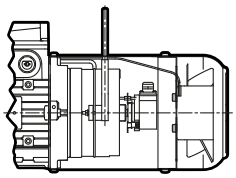

UT.C 1383

«Torque-speed» **characteristic curves** duly optimized for handling (horizontal and vertical traverse movements, rotation), slightly «sagged», without peaks in the hipersynchronous area and with carefully proportioned mean value.
Rated power delivered on continuous duty (S1) and referred to nominal voltage and frequency, ambient temperature 5 ÷ 104 °F and maximum altitude 3300 ft.
Housing in pressure diecast light alloy.
Drive end flange and non-drive end endshield in cast iron or light alloy.
«Supported» tightening attachments of **endshields and flanges** fitted on housing with «tight» coupling.
Ball bearings lubricated «for life» assuming pollution-free surroundings; preload spring.
Motor shaft in steel axially fastened on drive end endshield.
Rear threaded extraction **hole.**
Steel **fan cover**.
Thermoplastic **cooling fan** with radial vanes.

Terminal box made of light alloy (integral with housing with knockout cable openings on both sides, two holes, one for power cable and one for auxiliary equipment). Left side position non drive end (pos. TB0 see page 40); on request other positions. Pressure diecast light alloy **terminal box cover**.
Terminal block with 9 terminals for supply voltage YY230 Y460 60 Hz.
Earth terminal located inside terminal box; prearranged for the installation of further two external earth terminals on housing.
Brake supply: with rectifier laying in terminal box having 2 terminals for cable connection for rectifier supply, 2 for rapid braking external contact; possible brake supply **directly from motor terminal block** or **separately** (to use for: motors supplied by inverter, separate drive needs of motor and brake, etc.). Brake can be supplied, also at motor standstill, with no time limitations.
Rotor: pressure diecast cage rotor in aluminium.
Stator winding with class H copper conductor insulation, insulated with double coat, type of impregnation with resin of class H; other materials are of classes F and H for a class F insulation system.
Rotor **dynamic balancing**: vibration velocity under standard rating A. Motors are balanced with half key inserted into shaft extension.
Painting with two-component water based acrylic enamel, color blue RAL 5010 DIN 1843, suitable for normal industrial environments (corrosivity class C3 ISO 12944-2)

For **non-standard designs** and accessories see page 41.

15.3.2 Brake specifications

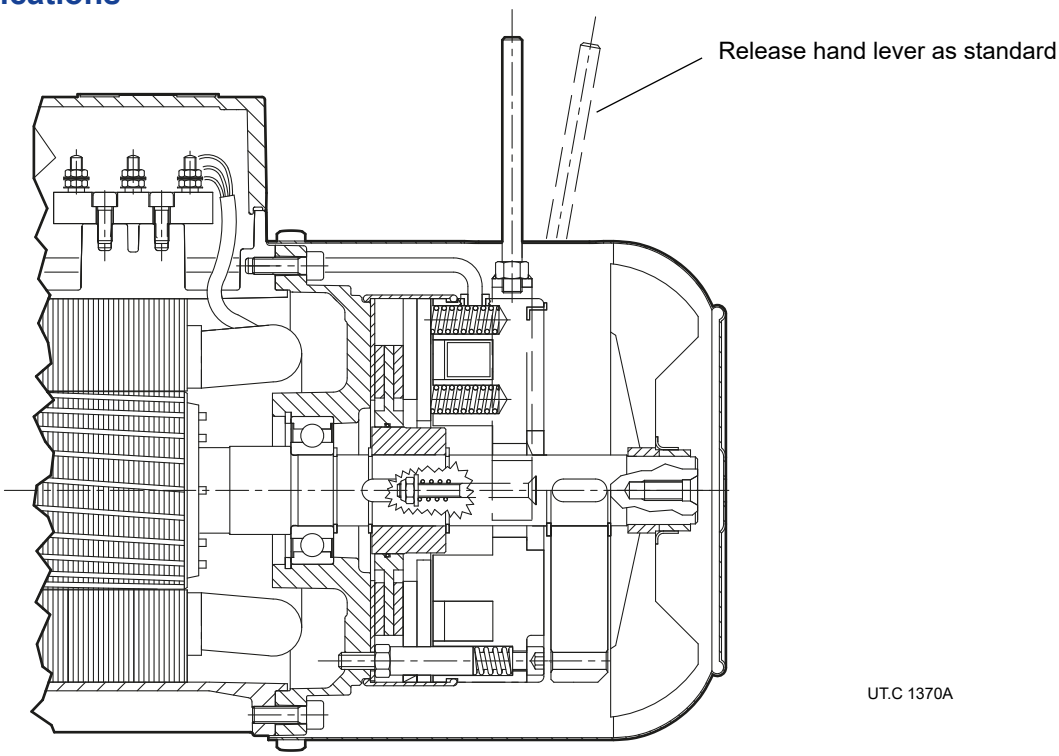

Electromagnetic spring loaded brake (braking occurs automatically when it is not supplied), with **d.c.** toroidal coil and double braking surface, braking torque proportioned to motor torque (usually $T_b \approx 2\ T_N$).
Maximum reduced noise level and operation progressivity (both at starting and braking thanks to a lower rapidity, typical of d.c. brake, of the anchor, which is lighter and less quick in the impact: motor starts slightly braked i.e. with greater progressivity); **good release and braking rapidity**; possibility to increase rapidity, both in releasing (with rapid rectifier) and braking, with supply opening on d.c. side; high braking capacity.
Designs available for every application (encoder, independent cooling fan, independent cooling fan and encoder, second shaft end, etc.).

Particularly suitable for applications requiring regular and low-noise starting and braking and, at the same time, braking with good rapidity and precision and high number of starts.
When electromagnet is not supplied, the brake anchor pushed by springs, presses the brake disk on rear end-shield generating the braking torque on the same brake disk and consequentely on motor shaft it is keyed onto; by supplying the brake the electromagnet draws the brake anchor and releases brake disk and driving shaft.

Key features:

- **multivoltage rectifier** (as standard), specifically designed for the management of a **brake coil only** with supply voltage always coordinated with standard voltage of HBZ motor;
- **rectifier supply directly from motor terminal block** or indifferently from a separate line;
- **braking torque** adjustable by changing number of springs;
- **insulation class F**, temperature rise class B;
- **brake disk**, sliding on moving hub: with single steel coat and double friction surface with average friction coefficient for low wear;
- **brake anchor in two pieces** for greater rapidity of starting and reduced noise;
- **water-proof and dust-proof gaiter and V-ring** both to prevent polluting infiltrations from surroundings towards brake, and to avoid that wear dust of friction surface will be dispersed in the surroundings;
- **lever for manual release with automatic return (as standard)** and removable level rod; position of release lever corresponding to terminal box; on request, other possible positions. Contact Rossi North America;
- **for other running specifications** see following table.

For **non-standard designs** and accessories see page 41.

Motor is always **equipped with a high reliable rectifier** fixed on terminal box providing adequate connecting terminal (2 for rectifier supply directly from motor terminal block or separate; 2 for external contact of rapid braking).

The rectifier is supplied as standard connected to the motor terminal block for direct power supply Y460 V - 60 Hz.
In case of YY230 V - 60 Hz motor power supply, the connection must be changed (see cat. TX).

Multivoltage rectifiers **RM1**(1) (supplied as standard for brakes 12 ... 14) and **RM2**(1) (supplied as standard for brakes 05 ... 07) are a.c./d.c. supply voltage devices with full-wave controlled bridge able to **supply output voltage value independently from input voltage.**

The DC brake is suitable for power supply

range 110 ÷ 440 V a.c. (for brake sizes 12 ÷ 15)
range 200 ÷ 440 V a.c. (for brake sizes 06S ... 07)

without having to change the coil and therefore is also always coordinated with both motor voltages.
In the supply range 200 ÷ 440 V a.c., the rectifier also has an integrated speed-up function (a higher voltage than the nominal voltage is supplied to the brake coil for approx. 400 ms at the start, allowing the brake to be released more quickly).
In addition, compared to a conventional rectifier, multi-voltage also offers the following advantages:

- greater constancy of the brake performance (the output voltage being at a constant predefined value independent of fluctuations in the supply voltage);
- lower brake holding voltage (75 V d.c.) in the released state (lower power consumption, less coil heating and shorter braking delay).

Both models of rectifiers (RM1, RM2) can be switched on and off either on the a.c. side (for maximum quiet operation), or on the a.c. and d.c. sides. (for faster braking), as they are equipped with varistors to protect the diodes, the electromagnet and the d.c. side opening contact.

Main functional brake specifications

Actual values may deviate slightly depending on the ambient temperature and humidity, the brake temperature and the wear condition of the friction linings.

Brake size	(2)	Motor size	T_b 2 springs lb in	T_b 4 springs lb in	T_b 6 springs lb in	Absorption V a.c.	Absorption A a.c. max	Absorption W	Delay of release t_1 (4) ms	Delay of braking t_2 ms	Delay of braking t_2 (5) (d.c.) ms	Air-gap mm min	Air-gap mm max	W_1 (6) MJ/mm	C_{max} (7) mm	W_{max} (8) brakings/h 10	W_{max} (8) brakings/h 100	W_{max} (8) brakings/h 1000
BZ 12	RM1	63 71	15.5	31.0	-	110 ÷ 440	0.09	9	20	100	10	0.25	0.40	70	5	4500	1120	160
BZ 53,13	RM1	71 80	22.1	44.2	66	110 ÷ 440	0.14	12	32	120	10	0.25	0.40	90	5	5600	1400	200
BZ 04, 14	RM1	80 90	44.3	97	142	110 ÷ 440	0.20	16	45	150	10	0.30	0.45	125	5	7500	1900	265
BZ 05, 15	RM2	90 100 112	115	239	354	110 ÷ 440	0.26	24	63	220	15	0.30	0.45	160	5	10000	2500	355
BZ 06 S	RM2	112	221	443	664	200 ÷ 440	0.28	30	90	300	30	0.35	0.55	220	5	14000	3550	500
BZ 56	RM2	132 S	327	664	-	200 ÷ 440	0.28	50	90	224	20	0.35	0.55	224	4.5	14000	3550	500
BZ 06	RM2	132 S. M	443	885	-	200 ÷ 440	0.28	50	90	224	20	0.35	0.55	224	4.5	14000	3550	500
BZ 07	RM2	132 MC	443	885	1328	200 ÷ 440	0.34	65	125	280	25	0.40	0.60	315	4.5	20000	5000	710

(1) The multivoltage rectifiers RM1 and RM2 are patented devices.
(2) Standard rectifier, supplied as standard; the rest time must be between 2.5 s ÷ 3.5 s. If necessary, please contact Rossi North America.
(3) Values valid with T_{bmax}, mean air-gap, nominal value of supply voltage.
(4) Brake release time obtained with standard rectifier and, for RM1, with supply voltage 200 V c.a.
(5) Braking delay obtained with separate brake supply and disconnection on a.c. side of rectifier (t_2) or on a.c. and d.c. side. (t_2 *d.c*).
With direct supply from motor terminal block, the values of t_2 increase by approx. 2,5 times the ones stated in the table.
(6) Work of friction generating a brake disk wear of 1 mm. (minimum value for heavy application, real value is usually greater).
(7) Maximum brake disk wear.
(8) Maximum friction work for each braking.

Technical data of compact asynchronous three-phase brake motor HBZ

4 poles - 1700 rpm

IP 55
IC 411
Insulation class F
Temperature rise class B
Service factor SF1.15
9 terminals

IE2
230.460 V - 60Hz

ErP CE c UL US
NEMA MG1-12

P_N (1) hp	P_N (1) kW	Motor	n_N (1) rpm	T_N lb in	I_N A 230 V	I_N A 460 V	PF (1) %	η Nom. Eff. MG 1-12 %	NEMA Code	T_S / T_N	T_{max} / T_N	I_S / I_N	WK_0^2 lb ft²	Brake	T_b lb in	z_0 start/h	lb
0.16	0.12	**HB2Z 63 A 4**	1690	6.0	0.84	0.42	58	64	J	3.1	3.1	3.6	0.0071	BZ 12	15.5	10000	12.6
0.25	0.18	**HB2Z 63 B 4**	1680	9.0	1.18	0.59	60	69	J	3.3	3.1	3.8	0.0095	BZ 12	31.0	10000	13.9
0.33	0.25	**HB2Z 71 A 4**	1720	12.3	1.4	0.7	65	70.9	K	2.8	3.3	4.8	0.0190	BZ 53	44.3	8000	18.5
0.5	0.37	**HB2Z 71 B 4**	1720	18.2	1.9	0.95	65	76	K	3.1	3.8	5.3	0.0237	BZ 53	44.3	8000	20.5
0.75	0.55	**HB2Z 80 A 4**	1740	26.6	2.4	1.2	74	78.4	L	3.3	3.7	7.2	0.0593	BZ 04	97	6300	28.7

4 poles - 1700 rpm

IP 55
IC 411
Insulation class F
Temperature rise class B
Service factor SF1.15
9 terminals

Premium Efficiency (IE3)
230.460 V - 60Hz
EISA

ENERGY c UL US CC131B

In according with US DOE
10 CFR 431 and CSA C390 EISA ACT
December 19, 2017

P_N (1) hp	P_N (1) kW	Motor	n_N (1) rpm	T_N lb in	I_N A 230 V	I_N A 460 V	PF (1) %	η Nom. Eff. MG 1-12 %	NEMA Code	T_S / T_N	T_{max} / T_N	I_S / I_N	WK_0^2 lb ft²	Brake	T_b lb in	z_0 start/h	lb
1	0.75 (2)	**HB3Z 90S 4**	1740	36.2	3	1.5	73	85.5	K	3.4	4.3	7.2	0.0808	BZ 14	97	3150	42.7
1.5	1.1 (2)	**HB3Z 90L 4**	1740	54	4.2	2.1	75	86.5	K	3.4	4.1	7.7	0.1069	BZ 14	142	2500	49.3
2	1.5	**HB3Z 90LB 4**	1740	73	5.8	2.9	75	86.5	L	3.4	4.4	7.9	0.1116	BZ 05	239	2500	53.9
3	2.2	**HB3Z 112MA 4**	1760	106	8	4	78	89.5	M	3.9	5.1	9.6	0.2922	BZ 15	354	2000	81.4
4	3 (2)	**HB3Z 112M 4**	1750	144	10.6	5.3	79	89.5	M	4.1	5.4	9.4	0.3159	BZ 15	354	1600	85.8
5.4	4 (2)	**HB3Z 112MB 4**	1760	193	15	7.5	75	89.5	N	4.0	5.5	10.3	0.3539	BZ 06S	664	1400	96.8
7.5	5.5 (2)	**HB3Z 132M 4**	1770	263	19	9.5	79	91.7	L	4.1	4.4	9.7	0.8717	BZ 56	664	710	151.8
10	7.5	**HB3Z 132MB 4**	1760	359	25.8	12.9	79	91.7	L	3.7	4.4	9.1	1.0879	BZ 06	885	710	174.9
12.3	9.2 (2)	**HB3Z 132MC 4**	1760	441	33.6	16.8	79	91.7	L	3.7	4.4	9.1	1.0868	BZ 07	1328	710	174.9

(1) The nameplate contains data expressed in: hp, rpm, PF (power factor) in %.
(2) Power or motor power-to-size correspondence not according to standard.

6 poles - 1200 rpm

IP 55
IC 411
Insulation class F
Temperature rise class B
Service factor SF1.15
9 terminals

IE2
230.460 V - 60Hz
ErP
NEMA MG1-12

P_N (1) hp	P_N (1) kW	Motor	n_N (1) rpm	T_N lb in	I_N A 230 V	I_N A 460 V	PF (1) %	η Nom. Eff. MG 1-12 %	NEMA Code	T_S/T_N	T_{max}/T_N	I_S/I_N	WK_0^2 lb ft²	Brake	T_b lb in	z_0 start/h	lb
0.16	0.12	**HB2Z 63 B 6**	1120	9.0	1.04	0.52	53	55.8	J	3.1	3.2	2.9	0.0119	BZ 12	31	10000	13.9
0.25	0.18	**HB2Z 71 A 6**	1120	13.5	1.22	0.61	60	62.6	H	3	3.1	3.6	0.0237	BZ 53	44.3	9000	19.1
0.33	0.25	**HB2Z 71 B 6**	1120	18.6	1.62	0.81	60	64.9	J	3.1	3.1	3.9	0.0308	BZ 53	44.3	9000	20.9
0.5	0.37	**HB2Z 80 A 6**	1130	27.6	2.2	1.1	61	68.4	J	3.3	3.5	4.3	0.0498	BZ 04	97	7500	26.4
0.75	0.55	**HB2Z 80 B 6**	1140	40.7	3	1.5	62	75.7	K	3.6	3.7	5.3	0.0783	BZ 04	142	7100	33.0

6 poles - 1200 rpm

IP 55
IC 411
Insulation class F
Temperature rise class B
Service factor SF1.15
9 terminals

Premium Efficiency (IE3)
230.460 V - 60Hz
EISA
ENERGY
CC131B

In according with US DOE
10 CFR 431 and CSA C390 EISA ACT
December 19, 2017

P_N (1) hp	P_N (1) kW	Motor	n_N (1) rpm	T_N lb in	I_N A 230 V	I_N A 460 V	PF (1) %	η Nom. Eff. MG 1-12 %	NEMA Code	T_S/T_N	T_{max}/T_N	I_S/I_N	WK_0^2 lb ft²	Brake	T_b lb in	z_0 start/h	lb
1	0.75 (2)	**HB3Z 100LA 6**	1160	53.98	3.2	1.6	71	82.5	M	2.9	4.4	7.9	0.3183	BZ 15	115	3200	70.4
1.5	1.1 (2)	**HB3Z 112M 6**	1160	80.54	4.4	2.2	73	87.5	J	2.5	3.4	6.3	0.5202	BZ 15	239	2500	88.0
2	1.5 (2)	**HB3Z 112 MB 6**	1160	109	6.2	3.1	70	88.5	K	3.0	3.9	6.9	0.5202	BZ 15	354	2000	88.0
3	2.2 (2)	**HB3Z 132 S 6**	1170	159	8.6	4.3	72	89.5	K	2.7	3.6	7.3	0.8717	BZ 06	442	1400	127.7
4	3 (2)	**HB3Z 132 M 6**	1170	217	11.6	5.8	72	89.5	K	2.8	3.8	7.6	1.1188	BZ 56	664	1000	147.7

(1) The nameplate contains data expressed in: hp, rpm, PF (power factor) in %.
(2) Power or motor power-to-size correspondence not according to standard.

page intentionally left blank

16

Installation and maintenance

Section contents

16.1 Safety 290

16.2 Installation and maintenance 291

16.1

Safety

Important:
The gearmotors supplied by Rossi S.p.A. must be incorporated into machinery and **should not be commissioned before the machinery or system in which the components have been incorporated conforms to:**

- **Machinery directive 2006/42/EC and subsequent updatings; in particular, possible safety guards for shaft ends not being used and for eventually accessible fan cover passages (or other) are the Buyer's responsibility;**
- **«Electromagnetic compatibility (EMC)» 2004/108/EC and subsequent updatings.**

Attention!
It is recommended to pay attention to all instructions of present handbook, all existing safety laws and standards concerning correct installation. Whenever personal injury or property damage may occur, due to falling or projecting parts of gear reducer or of its parts, foresee adequate supplementary protection devices against loosening or breaking of the fastening screws.
If deviations from normal operation occur (temperature increase, vibrations, unusual noise, etc.) immediately switch off the machine.

Safety during installation
An incorrect installation, an improper use, the removing or disconnection of protection devices, the lack of inspections and maintenance, improper connections may cause severe personal injury or property damage.
Therefore the component must be moved, installed, commissioned, handled, controlled, serviced and re-paired **exclusively by responsible qualified personnel specifically instructed** and have the necessary experience to recognize any risks connected with present products avoiding any possible emergencies.

Gear reducers and gearmotors of present catalog are normally suitable for installations in industrial areas: additional protection measures, if necessary, must be adopted and assured by the personnel responsible for the installation.

Attention!
Motors in non-standard design or with constructive **variations** may differ in the details from the ones described here following and may require additional information.

Attention!
For the installation, use and maintenance of the electric motor of the possible motor-variator and/or the electric supply device (frequency converter, soft-start, etc.), and/or any optional electric devices (e.g.: independent cooling fan, etc.), consult the specific attached documentation. If necessary, require it.

Safety during maintenance
When operating on gear reducer or on components connected to it, the **machine must be at rest, disconnected from power supply and cold**: disconnect motor (including auxiliary equipments) from power supply, gear reducer from load, be sure that safety systems are on against any accidental starting and, if necessary, pre-arrange mechanical locking devices (to be removed before commissioning).

Attention!
During the running the gear reducers could have **hot surfaces**; Always wait that the gear reducer or the gearmotor to cool before carrying out any operations. Further technical documentation (e.g. catalogs) can be downloaded from our website **www.rossi.com**.

Be sure that the structure on which gearmotor is fitted is plane, levelled and sufficiently dimensioned in order to assure fitting stability and vibration absence, keeping in mind all transmitted forces due to the masses, to the torque, to the radial and axial loads.

Position the gearmotor so as to allow a free passage of air for cooling both gear reducer and motor (especially at motor fan side).

Avoid: any obstruction to the air-flow; heat sources near the gearmotor that might affect the temperature of cooling-air and of gearmotor for radiation; insufficient air recycle or any other factor hindering the steady dissipation of heat.
Mount the gearmotor so as not to receive vibrations.

When external loads are present use pins or locking blocks, if necessary.

When fitting gear reducer and machine and/or gear reducer and eventual flange B5 it is recommended to use **locking adhesives** such as LOCTITE on the fastening screws (also on flange mating surfaces).
For outdoor installation or in a hostile environment protect the gearmotor with anticorrosion paint. Added protection may be afforded by water-repellent grease (especially around the rotary seating of seal rings and the accessible zones of shaft end).

Gearmotors should be protected wherever possible, and by whatever appropriate means, from solar radiation and extremes of weather; weather protection **becomes essential** when the low or high speed shafts or when motor is vertical with fan on the top.

For ambient temperatures higher than 104 °F or lower than 32 °F, contact Rossi North America.

Before wiring-up the gearmotor, make sure that motor voltage corresponds to input voltage.
If direction of rotation is not as desired, invert two phases at the terminals.

If overloads are imposed for long periods or if shocks or danger of jamming are envisaged, then motor-protection, electronic torque limiters, fluid couplings, safety couplings, control units or other similar devices should be fitted.
Where duty cycles involve a high number of starts on-load, it is advisable to utilize **thermal probes** (fitted on the wiring) for motor protection; a thermal overload relay is unsuitable since its threshold must be set higher than the motor's nominal current rating.

Use varistors to limit voltage peaks due to contactors.

Attention!
Bearing life and good shaft and coupling running depend on alignment precision between the shafts.
Carefully align the gearmotor with the driven machine (with the aid of shims if need be), interposing flexible couplings whenever possible.
Whenever a leakage of lubricant could cause heavy damages, increase the frequency of inspections and/or envisage appropriate control devices (e.g.: remote oil level gauge, lubricant for food industry, etc.).

In polluting surroundings, take suitable precautions against lubricant contamination through seal rings or other.

For brake or non-standard motors, consult us for specific information.

Fitting of components to low speed shaft ends
It is recommended that the bore of parts keyed to low speed shaft ends is machined to K7 tolerance (H7 when load is uniform and light).
Before mounting, thoroughly clean mating surfaces and lubricate against seizure and fretting corrosion. Installing and removal operations should be carried out with pullers and jacking screws using the tapped hole at the shaft butt-end.

Machine pivot
For the machine pivot the gear reducer hollow shaft is to be keyed onto we recommend the dimensions stated on page 12.

1 Application conditions

Application / Industry sector

Type of machine to be driven

- ☐ new machine
- ☐ existing machine, running gear reducer currently applied

Ambient temperature [°T]

min	standard	max

Altitude [ft above sea level]

Environment:

- ☐ normal (industrial) indoor
- ☐ normal (industrial) outdoor
- ☐ dusty
- ☐ corrosive / humid

Gear reducer position:

- ☐ small environment with limited air movement (v_{air} < 2 ft/s)
- ☐ wide environment with free air movement (v_{air} > 4 ft/s)
- ☐ open space, protected against extremes of weather and solar radiance

2 Load data

Required output speed [rpm]

min	nominal	max

Torque required at low speed shaft [lb in]

min	nominal	max

Required output power [hp]

min	nominal	max

Input speed (gear reducers) [rpm]

min	nominal	max

Nature of load:

- ☐ uniform
- ☐ moderate overloads
- ☐ heavy overloads

Frequency of starting [starts/h]

Machine moment of inertia [lb ft²]

min	standard	max

Running time [h/d]

Total duration [h]

Duty cycle (S1 ... S10)

Load cycle attached

- ☐ yes
- ☐ no

3 Motor

Motor type:

- ☐ asynchronous three-phase (a.c.)
- ☐ asynchronous three-phase with inverter
- ☐ d.c. motor with relevant converter
- ☐ internal combustion motor (single-cylinder)
- ☐ internal combustion motor (multi-cylinder)

Power P_1 [hp]

min	nominal	max

Nominal speed n_1 [rpm]

min	nominal	max

a.c. motor supply:

voltage [V]	frequency [Hz]

IEC motor size (a.c. motor)

Type of a.c. motor starting:

- ☐ direct
- ☐ Y / Δ
- ☐ soft starter / inverter

Electromagnetic motor

- ☐ parking brake
- ☐ work
- ☐ safety

Braking torque [lb in]

Starting torque [lb in]

Moment of inertia [lb ft²]

Electric motor design (a.c. and d.c.):

- ☐ with independent cooling fan
- ☐ with encoder:
- ☐ with tacho-generator

System of motor-gear reducer mounting:

- ☐ with coupling
- ☐ with trapezoidal belts

section	No.	d_m [in]	d_1 [in]

- ☐ with toothed belt drive

section	No.	d_m [in]

Eventual limit to drive dimensions

4 Gear reducer

Mounting position

Direction of rotation of output shaft

- ☐ white arrow
- ☐ black arrow
- ☐ white and black arrow

Backstop device (if present)

- ☐ free rotation, white arrow
- ☐ free rotation, black arrow

Type of admitted cooling

- ☐ with fan
- ☐ with coil
- ☐ with internal exchanger
- ☐ with UR O/A unit
- ☐ with UR O/W unit

Type of machine coupling

- ☐ shaft mounting
- ☐ with fluid / flexible coupling
- ☐ with cardan joint
- ☐ with toothed belt drive

pitch	d_m	d_1	ϕ

- ☐ with chain

pitch	No.	z_2	z_3	overhang [in]	ϕ

- ☐ straight tooth cylindrical gear

pitch	No.	z_2	z_3	overhang [in]	ϕ

Eventual axial load F_a [lb]

Eventual limit to drive dimensions

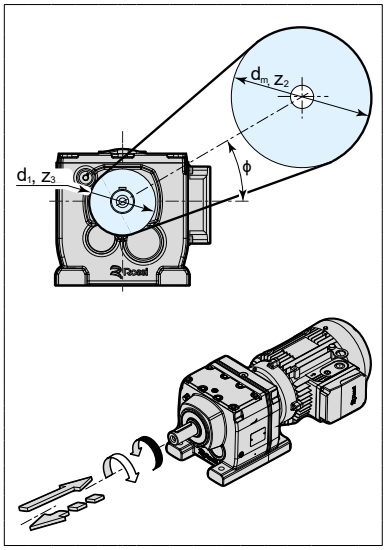

Frame size	With Technical System units	With SI units
starting or stopping **time** as a function of an acceleration or deceleration, of a starting or braking torque	$t = \frac{v}{a}$ [s] $t = \frac{Gd^2 \cdot n}{375 \cdot M}$ [s]	$t = \frac{J \cdot \omega}{M}$ [s]
velocity in rotary motion	$v = \frac{\pi \cdot d \cdot n}{60} = \frac{d \cdot n}{19{,}1}$ [m/s]	$v = \omega \cdot r$ [m/s]
angular velocity	$n = \frac{60 \cdot v}{\pi \cdot d} = \frac{19{,}1 \cdot v}{d}$ [rpm]	$\omega = \frac{v}{r}$ [rad/s]
acceleration or deceleration as a function of starting or stopping time	$a = \frac{v}{t}$ [m/s²]	
angular **acceleration** or **deceleration** as a function of a starting or stopping time, of a starting or braking torque	$\alpha = \frac{n}{9{,}55 \cdot t}$ [rad/s²] $\alpha = \frac{39{,}2 \cdot M}{Gd^2}$ [rad/s²]	$\alpha = \frac{\omega}{t}$ [rad/s²] $\alpha = \frac{M}{J}$ [rad/s²]
starting or stopping distance as a function of an **acceleration** or deceleration, of a final or initial velocity	$s = \frac{a \cdot t^2}{2}$ [m] $s = \frac{v \cdot t}{2}$ [m] $w = \frac{\alpha \cdot t^2}{2}$ [rad]	
starting or stopping **angle** as a function of an angular acceleration or deceleration, of a final or initial angular velocity	$\varphi = \frac{n \cdot t}{19{,}1}$ [rad]	$\varphi = \frac{\omega \cdot t}{2}$ [rad]
mass	$m = \frac{G}{g}$ $[\frac{kgf\ s^2}{m}]$	m is the unit of mass [kg]
weight (weight force)	G is the unit of weight (weight force) [kgf]	$G = m \cdot g$ [N]
force in vertical (lifting), horizontal, inclined motion of translation (μ = coefficient of friction; φ = angle of inclination)	$F = G$ [kgf] $F = \mu \cdot G$ [kgf] $F = G\ (\mu \cdot \cos\varphi + \text{sen}\ \varphi)$ [kgf]	$F = m \cdot g$ [N] $F = \mu \cdot m \cdot g$ [N] $F = m \cdot g\ (\mu \cdot \cos\varphi + \text{sen}\ \varphi)$ [N]
dynamic moment Gd², moment of inertia J due to a motion of translation (numeralically $J = \frac{Gd^2}{4}$)	$Gd^2 = \frac{365 \cdot G \cdot v^2}{n^2}$ [kgf m²]	$J = \frac{m \cdot v^2}{\omega^2}$ [kg m²]
torque as a function of a force, of a dynamic moment or of a moment of inertia, of a power	$M = \frac{F \cdot d}{2}$ [kgf m] $M = \frac{Gd^2 \cdot n}{375 \cdot t}$ [kgf m] $M = \frac{716 \cdot P}{n}$ [kgf m]	$M = F \cdot r$ [N m] $M = \frac{J \cdot \omega}{t}$ [N m] $M = \frac{P}{\omega}$ [N m]
work, energy in motion of translation, in rotary motion	$W = \frac{G \cdot v^2}{19{,}6}$ [kgf m] $W = \frac{Gd^2 \cdot n^2}{7160}$ [kgf m]	$W = \frac{m \cdot v^2}{2}$ [J] $W = \frac{J \cdot \omega^2}{2}$ [J]
power in motion of translation, in rotary motion	$P = \frac{F \cdot v}{75}$ [CV] $P = \frac{M \cdot n}{716}$ [CV]	$P = F \cdot v$ [W] $P = M \cdot \omega$ [W]
power available at the shaft of a single-phase motor ($\cos\varphi$ = power factor)	$P = \frac{U \cdot I \cdot \eta \cdot \cos\varphi}{736}$ [CV]	$P = U \cdot I \cdot \eta \cdot \cos\varphi$ [W]
power available at the shaft of a three-phase motor	$P = \frac{U \cdot I \cdot \eta \cdot \cos\varphi}{425}$ [CV]	$P = 1{,}73 \cdot U \cdot I \cdot \eta \cdot \cos\varphi$ [W]

Note. Acceleration or deceleration are understood constant; motion of translation and rotary motion are understood rectilinear and circular respectively.

Index of revisions

List of updatings - Edition 2635-26.04-0

Reduced backlash removed

Solutions for
an evolving
industry

Rossi North America
3355 Martin Farm Road, Suite #400
Suwanee, GA 30024

Phone – 1 800 931-2044
Fax – 1 678- 288-3658

info.northamerica@rossi.com
www.rossi.com/northamerica

2635.CAT.iFIT-iC-iO-iP-26.04-0-US

© Rossi S.p.A. Rossi reserves the right to make any modification whenever to this publication contents. The information given in this document only contains general descriptions and/or performance features which may not always specifically reflect those described.

The Customer is responsible for the correct selection and application of product in view of its industrial and/or commercial needs, unless the use has been recommended by technical qualified personnel of Rossi, who were duly informed about Customer's application purposes. In this case all the necessary data required for the selection shall be communicated exactly and in writing by the Customer, stated in the order and confirmed by Rossi. The Customer is always responsible for the safety of product applications. Every care has been taken in the drawing up of the catalog to ensure the accuracy of the information contained in this publication, however Rossi can accept no responsibility for any errors, omissions or outdated data. Due to the constant evolution of the state of the art, Rossi reserves the right to make any modification whenever to this publication contents. The responsibility for the product selection is of the Customer, excluding different agreements duly legalized in writing and undersigned by the Parties.